NDS Home Page

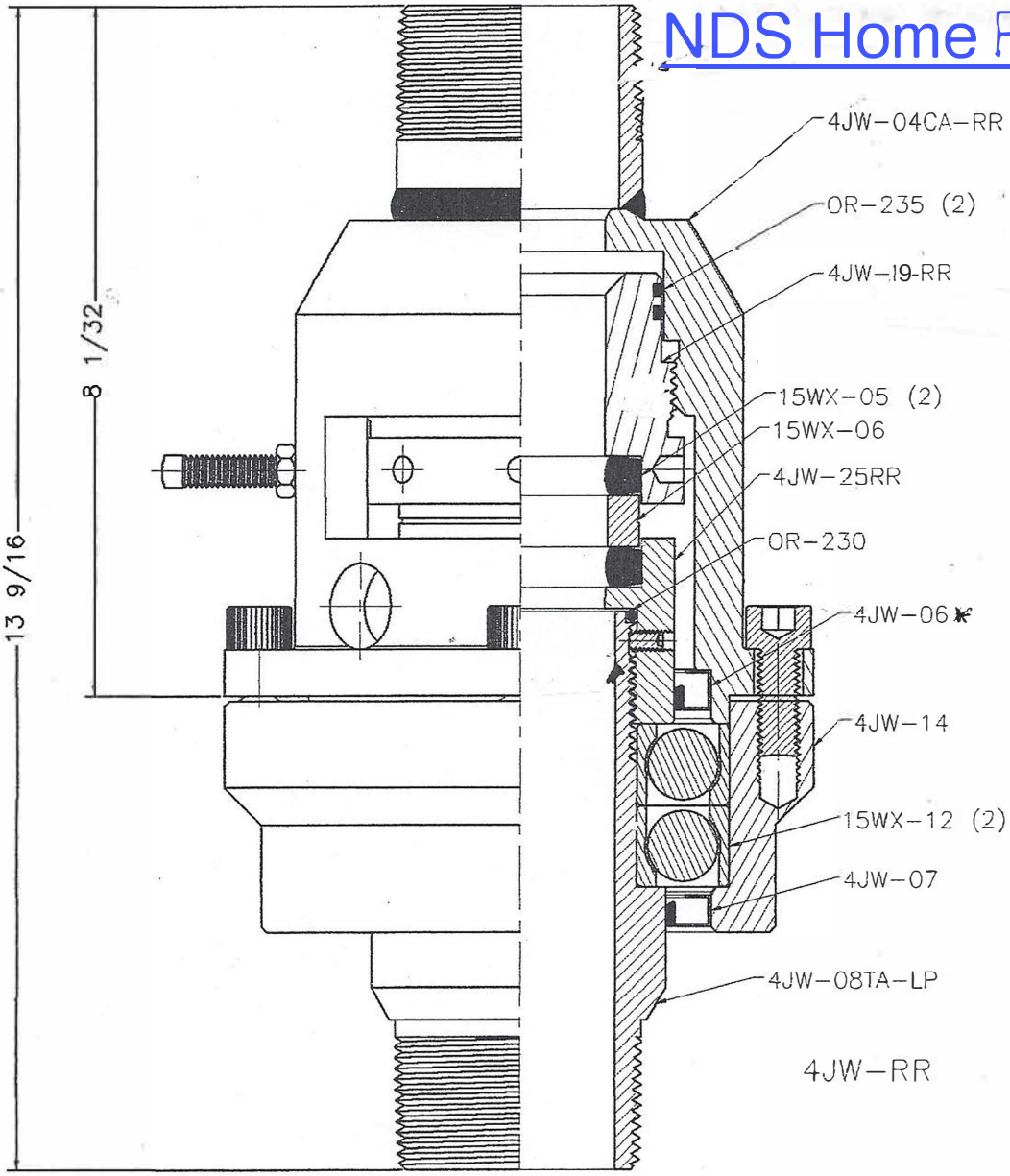

4JW-RR