(1) Clean all metal parts in an approved solvent.

(2) Inspect all parts for wear and damage.

(3) Check the springs for resiliency, collapsed coils, and distortion.

(4) Check the brake lining for wear, damage, and saturation with petroleum base lubricant.

NOTE

If the brake lining is scored, check the braking surface on the hoisting drum for possible cause.

(5) Replace all parts considered to be unserviceable or damaged beyond simple repair.

c. Reassembly. Reassemble the brake by reversing disassembly procedures.

3-22. AUXILIARY DRUM BRAKE ASSEMBLY (Figure 3-28).

a. Disassembly

(1) Remove the nut (1), lockwasher (2), spring (3), and bolt (4).

(2) Remove the nut (5), lockwasher (6), bolt (7), and quadrant (8).

(3) Remove nut (9), lockwasher (10), capscrew (11), and brake lever (12).

(4) Remove cotter pin (13), yoke pins (14), and release (15).

(5) Remove cotter pin (16), quadrant dog pin (17), roll pin (18), and dog (19).

(6) Remove the yoke (20), nut (21), yoke (22), brake lock stop (23), spring (24), and nut (25) from the rod (26).

(7) Remove the nut (27), lockwasher (28), capscrew (29), quadrant anchor (30), and key (31).

(8) Remove nut (32), cotter pins (33), retainer pin (34), and anchor bolt (35).

(9) Remove cotter pins (36), retainer pin (37), and brake band (38).

(10) Remove cotter pins (39), nuts (40), bolts (41), and links (42).

(11) Remove bushings (48) from shafts (46 and 47).

(12) Remove capscrews (43), lockwashers (44), and pillow block (45).

(13) Do not remove grease fittings (49, 50, and 51) adjusting bolts (52 and 53) unless replacement is necessary.

b. Cleaning, Inspection, and Repair

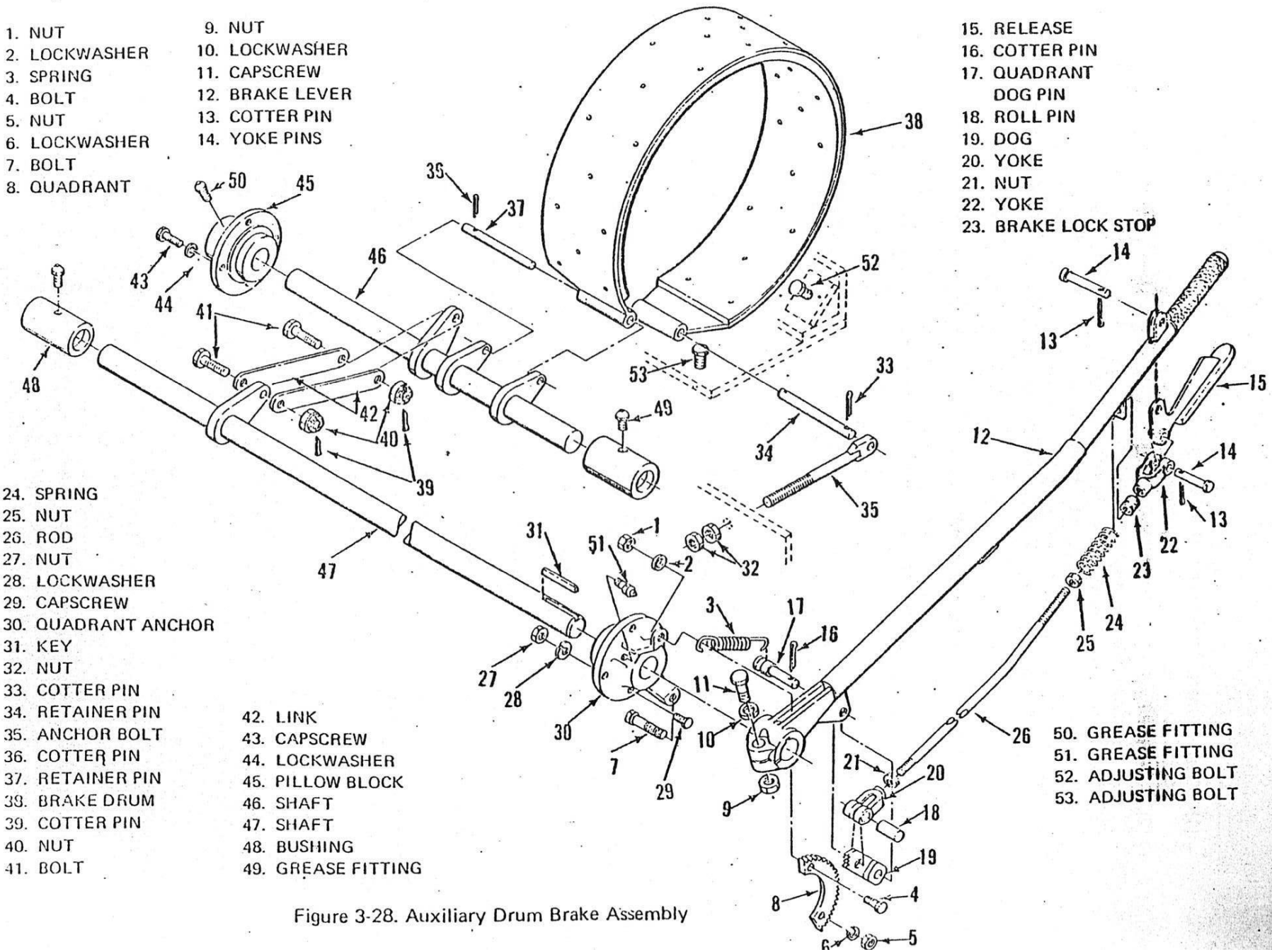

Figure 3-28. Auxiliary Drum Brake Assembly

(1) Clean all metal parts in an approved solvent.

(2) Inspect all parts for wear and damage.

(3) Check the springs for resiliency, collapsed coils, and distortion.

(4) Check the brake lining for wear, damage, and saturation with petroleum base lubricant.

NOTE

If the brake lining is scored, check the braking surface on the auxiliary drum for possible cause.

(5) Replace all parts considered to be unserviceable or damaged beyond simple repair.

c. Reassembly. Reassemble the brake by reversing disassembly procedures.

3-23. THIRD DRUM ASSEMBLY (Figure 3-29).

a. Disassembly

(1) Remove the rotoseal (1). Disconnect the hose (2) and remove the quick release valve (3).

(2) Remove nuts (17), lockwashers (18), capscrews (19), and chain guard (20).

(3) Remove nuts (4), lockwashers (5), and bolts (6).

(4) Remove nuts (21), lockwashers (22), and bolts (23).

(5) Attach a hoisting device to the third drum assembly. Loosen the setscrew (27), and move the third drum assembly as necessary to remove the sprocket (28) and chain (26).

(6) Remove pillow blocks (7 and 24) and shims (8 and 25).

(7) Remove nuts (34), lockwashers (35), bolts (36), clutch (9), spacer (10), and drive ring (37).

(8) Remove capscrews (11), retainer plate (12), seal (13), o-ring (14), spacer (15), and bearing (16).

(9) Remove capscrews (30), lockwashers (31), retainer plate (32), and bearing (33).

(10) Remove the shaft (41) and keys (29) from the third drum (38).

b. Cleaning, Inspection, and Repair

(1) Clean all parts with an approved solvent and dry thoroughly.

(2) Inspect sprocket for cracked, chipped, broken, or worn teeth.

(3) Check the chain for excessively worn or broken links.