2-14. SERVICING AND ADJUSTMENT OF THE FORCE FEED LUBRICATOR (Figure 2-11).

a. Checking Oil Level. The oil level in the force feed lubricator should be checked before starting any operation, if the force feed lubricator is to be used. Check the oil level by observing the sight glass on the side of the reservoir. If the oil level is low, remove the filler cap and add oil until the oil level is even with the full mark on the sight glass.

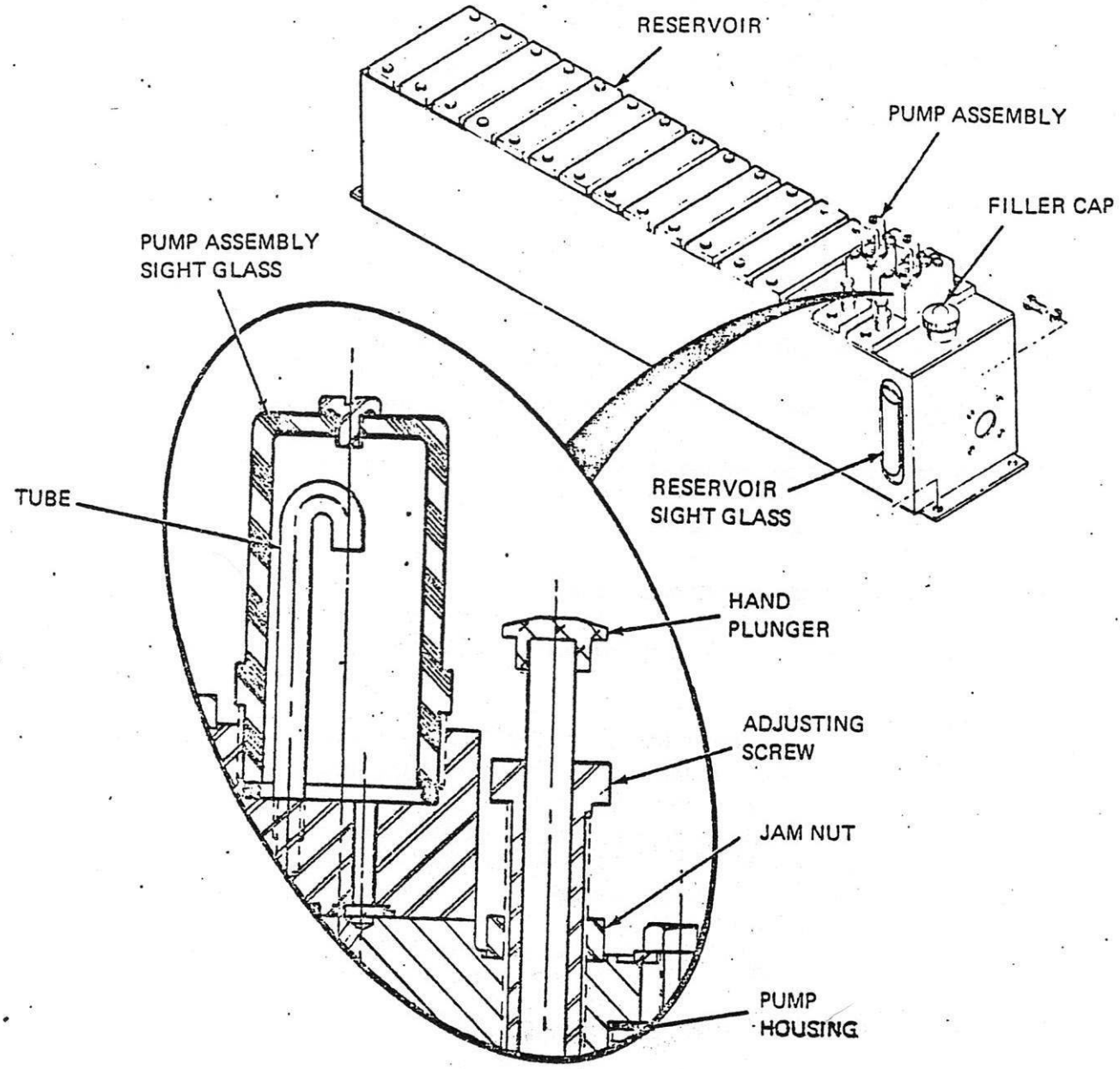

Figure 2-11 Force Feed Lubricator

b. Recommended Lubricant. Refer to the Lubrication Chart for the type of lubricant to be used.

c. Adjusting Pump Output. The pump output is checked by counting the number of drops that fall from the tube inside the pump assembly sight glass on each pump cycle. Perform the following procedures to adjust the pump output.

NOTE

The pumps can be adjusted to deliver from 4 drops per cycle (minimum) to 27 drops per cycle (maximum).

(1). Operate the force feed lubricator and observe the sight glass on the pump being checked. Count the number of drops of oil that fall from the tube inside the sight glass. The number of drops of oil that fall from the tube during each cycle of the pump is the amount of oil being applied to the component being lubricated.

(2). If the number of drops of oil falling from the tube cannot be definitely determined, perform the following procedures.

(a). Depress the hand plunger.

(b). Operate the force feed lubricator ON-OFF switch momentarily to the ON position, several times if necessary, until the pump stops with the hand plunger fully extended.

(c). Depress the hand plunger and count the drops of oil falling from the tube.

NOTE

If the drops of oil fill too fast to be counted, depress the hand plunger a second time. Hold a downward pressure on the hand plunger as it is allowed to return to the extended position. This will slow the frequency of the drops falling from the tube so that they can be counted.

(3). Perform the following procedures to change the pump output.

(a). Loosen the locknut.

(b). Turn the adjusting screw further into the pump housing to decrease pump output. Turn

the adjusting screw further out of the pump housing to increase pump output.

(c). Actuate the pump piston with the hand plunger after each adjustment and count the number of drops of oil falling from the tube.

(d). When the desired pump output is achieved, tighten the locknut.

2-15. SERVICING THE PNEUMATIC LUBRICATION SYSTEM

a. Filter.

(1). Draining. The filter (1, Figure 2-12) should be drained regularly to obtain maximum benefit. Open the drain cock (2) to drain the filter. Never allow moisture to fill the bowl up to the filter element.

(2). Cleaning. The filter must be dismantled for cleaning. The frequency of cleaning will be determined by the working environment. Perform the following procedures to clean the filter.

(a). Close the air cutoff valve (3, Figure 2-12).

(b). Open the drain cock (2).

(c). Remove the screws (1, Figure 2-13) and remove the body (2) from the cover (3).

(d). Wash all metal parts with a non-flamable solvent.

(e). Clean the felt filter element by soaking it in mineral spirits or similar cleaning agent.

(f). Inspect the filter element (4) and gasket (5), and replace if necessary.

(g). Use Figure 2-13 as a guide, and reassemble the filter.

b. Pressure Regulator. Occasionally the regulator will have to be disassembled for cleaning, inspection, and lubrication. The pressure regulator can be serviced without disconnecting the piping. Perform the following procedures to service the pressure regulator.

(1). Close the air cutoff valve (3, Figure 2-12).

(2). Remove the screws (1, Figure 2-13) bonnet (2), seat (3), spring (4), diaphragm follower (5), and diaphragm (6).

(3). Loosen the jam nut (7) and remove the handwheel (8).

(4). Remove the screws (9), baffle (10), gasket (11), valve seat (12), o-ring (13), and gasket (14).

(5). Remove the plunger (15), o-ring (16), spring (17), washer (18), and o-ring (19) from the body (20).