GEFCO

The George E. Failing Company

MANUFACTURER OF THE MOST COMPLETE LINE OF DRILLING RIGS IN THE INDUSTRY.

- Waterwell
- Soil Investigation
- Geothermal Remediation
- Coring
- Reverse Air
- Oil/Gas Production
- Geotechnical
- Exploration
- Seismic

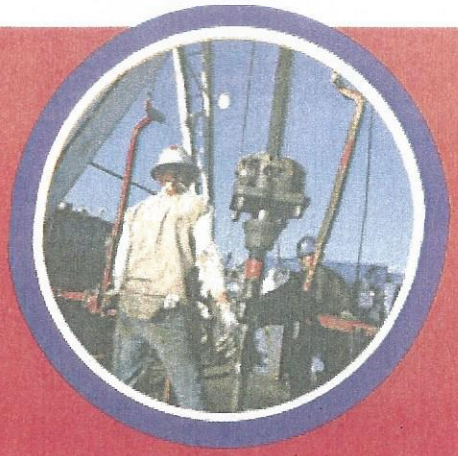

Failing — ROTARY TABLE DRILLING RIGS

STAR — CABLE TOOL DRILLING RIGS

SpeedStar — TOP DRIVE DRILLING RIGS

KING OIL TOOLS — SWIVELS AND HANDLING TOOLS

OPERATION & SERVICE MANUAL

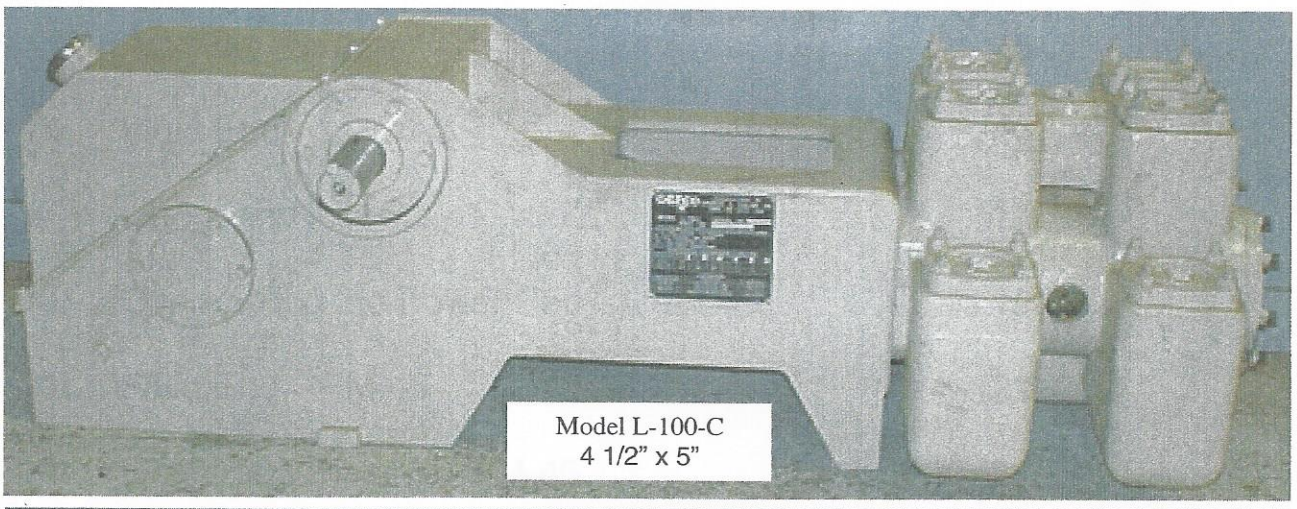

Model L-100-C
4 1/2" x 5"

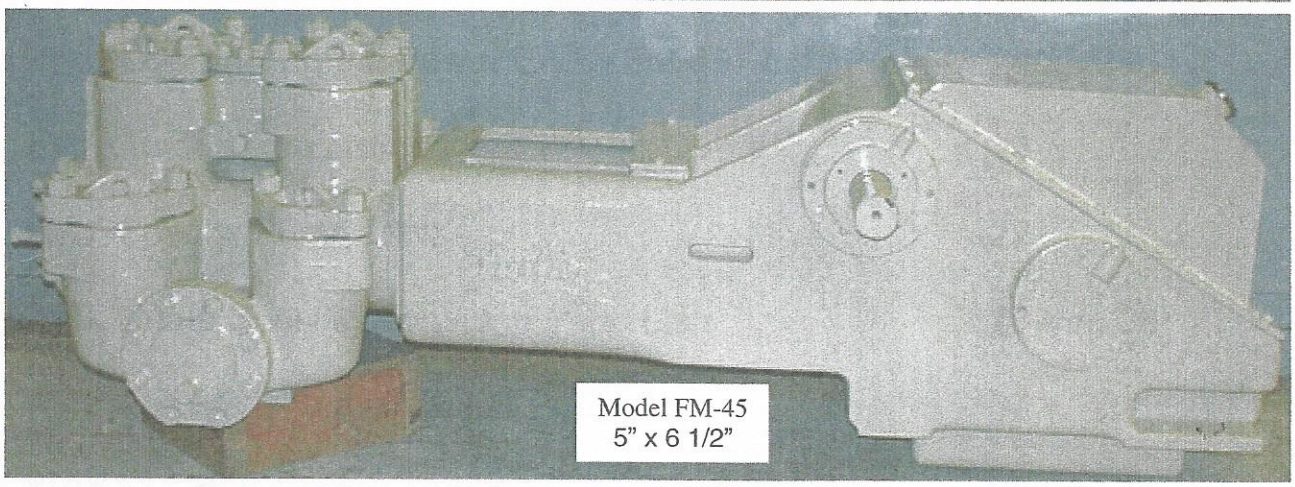

Model FM-45
5" x 6 1/2"

SECTION VIII
LUBRICATION

The recommended crankcase oils are non-detergent, rust and oxidation inhibitive, anti-foaming type industrial oil or motor oil
(Example: Conoco Dectol 100-30W or Dectol 150-40W).

	Summer	Winter	Capacity	Check	Change Interval
L-100-C	SAE-50-60 (ISO 220-320)	SAE-30 (ISO-100)	20 qts [19 l.]	Every 8 hours	Every 1000 hours
FM-45	SAE-50-60 (ISO 220-320)	SAE-30 (ISO-100)	17 qts [16 l.]	Every 8 hours	Every 1000 hours

CHECK THE OIL LEVEL DAILY

Maintain the oil level sufficient to run out of the level plug located on the side of the pump case with the pump stopped.

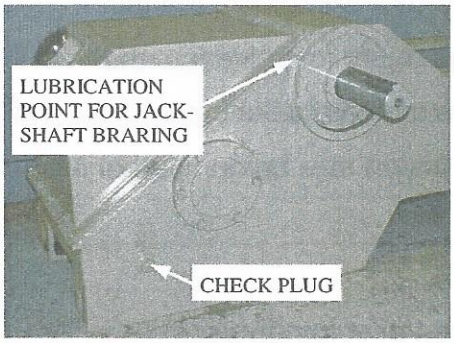

L-100-C

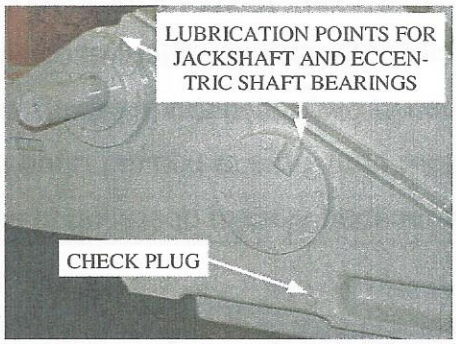

FM-45

The jackshaft and eccentric shaft bearings on the FM-45 are lubricated with medium pressure grease while only the jackshaft bearings on the L-100-C require medium pressure grease.

The lubricator packing glands [pages 17 & 22] on the piston rods should be filled daily with medium pressure grease to prevent leakage and packing wear.

SECTION IV
MUD PUMP PIPING

The insertion of a relief valve of suitable size for the capacity of the pump, set to open at a pressure above the operating discharge pressure required of the pump, is mandatory because of the safety it affords. The relief valve should be placed in the discharge line close to the pump and ahead of any other valves and set for pressure about 25% greater than the pump liner size maximum rating.

Shear pin type relief valves, which require little or no over-pressure to develop fully open flow capacity, are recommended. A spring type relief valve may require considerable over-pressure to compress the spring before becoming fully open, creating pump overload.

When fully open, the relief valve must have sufficient capacity so it will relieve the full capacity of the pump without excessive over-pressure. The pump relief valve has the purpose of protecting the pump. If full rated pump pressure is desired, select a set pressure above the maximum rated pressure for the specific piston size being used or the prescribed system operating pressure, if lower.

If the piston size is changed, the relief valve setting must be set accordingly.

A surge chamber/s should always be installed in the discharge line next to the fluid end, this greatly reduces hydraulic hammer, possible pump damage and premature relief valve actuation. Drain the flowline completely at least once a day to allow air into the surge chamber. Under pressure, the top of the surge chamber should still sound hollow. If it does not, the flowline needs to be drained.

Always install a pressure gauge ahead of the discharge stop valve so that it reads the pump pressure while mud mixing or washing down the rig.

The exhaust from the relief valve should always be directed to the ground so leakage or discharge is evident and presents no hazard to any personnel.

A relief valve must be installed to guard against the possibility of a mistakenly closed discharge stop valve.

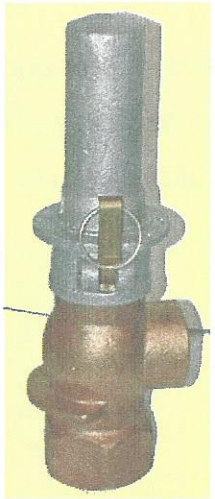

Shear Relief Valve
Part No. K-853170904
2" Inlet—1-1/2" Outlet
Maximum Pressure — 1000 psi

Nail Hole Size		
Nail Size	Drill Bit No.	Hole Dia.
16 Penny	19	.1660"
10 Penny	25	.1495"
8 Penny	29	.1360"
6 Penny	33	.1130"
4 Penny	38	.1015"
3 Penny	46	.0810"

This valve operates on the principle of shearing a nail when the maximum system pressure is exceeded. The valve uses a different size nail for different pressure settings.

NAIL SIZE CHART			
For Above Shear Relief Valve			
Size	Shear Pressure	Diameter	
		Inches	MM
16 penny	1000 psi	0.149"	3.8
10 penny	850 psi	0.137"	3.4
8 penny	600 psi	0.113"	2.8
6 penny	500 psi	0.100"	2.5
4 penny	400 psi	0.087"	2.2
3 penny	250 psi	0.073"	1.8

SEE THE CAUTION ON THE NEXT PAGE

CAUTION

Never install an Allen hex key or any other high strength material in the relief valve shear hole. This will result in pump trouble and, void the pump and pump drive warranty. The relief valve must be installed on the main flow line. This avoids formation of a mudcake and eventually a mud plug in your relief line.

Never oversize the nail or the pressure rating. Your pump fluid end, power end and or drive components may fail and the repair will be costly and time consuming. The shear relief valve **MUST** be installed between your pump and the first cutoff valve.

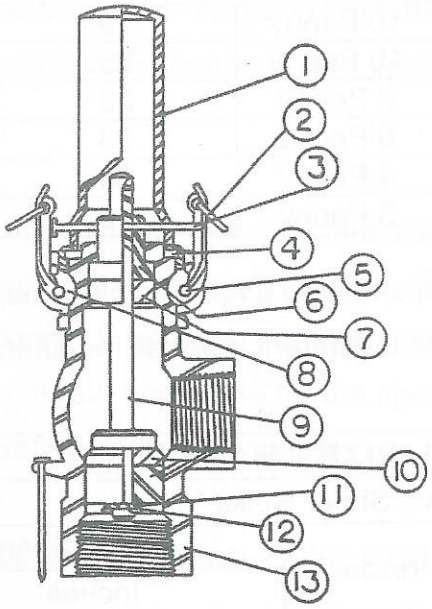

ITEM	PART NO.	QTY	DESCRIPTION
1	XCS-1030-P	1	GUARD
2	XCS-1021-PU	2	RING
3	NAIL SIZE FOR RELIEF SETTING—SEE PAGE		
4	XCS-1023-PY	1	GASKET
5	XCS-1022-PT	2	PIN
6	XCS-1040	1	BUSHING
7	XCS-1050	1	CUSHION
8	XCS-1020-PX	2	LEVER
9	XCS-1060	1	STEM
10	XCS-1080	1	WASHER & PISTON
11	XCS-1090	1	WASHER
12	XCS-1091	1	PIN
13	XCS-1010	1	BODY

A Cameron style pressure gauge or a remote pump pressure gauge must be installed in your flowline. Have these gauges checked and calibrated from time to time. The gauge is a very important indicator as it will show the driller what the bit is doing on the bottom of the hole and it tells a story about the formation being drilled.

Type "F" Pressure Gauge

The self-contained dampening mechanism in this gauge requires no adjustment for changes in pressure range, and gives uniform, steady pressure readings. The dial and internal parts are cushioned against line vibrations and the gauge window will not frost in cold weather. The gauge is ideal for slush pump service, portable core drills, pipe lines and christmas tree installations. The gauge has a 2" NPT male bottom connection.

Total Graduations	Part Number
0-1000 Lbs.	D-2004
0-3000 Lbs.	XCI-3140-3

The various fittings necessary must always have a minimum rating of 2000 psi. Select from the following parts to keep in your stock for fast repair:

EXTRA HEAVY PIPE FITTINGS

	Close Nipple	Elbow 90°	Elbow 45°	Tee	Cross	Pipe Union	Hammer Union	Coupling
1-1/2"	144F281	143F044	143F207	143F272	143F507	143F550	143F577	143F639
2"	144F259	143F043	143F206	143F271	143F506	143F549	143F576	143F638
2-1/2"	144F238	143F042	143F205	143F270	143F505	143F548	143F575	143F637
3"	144F218	143F041	143F204	143F269	143F504	143F547	143F574	143F636
4"	144F180	143F040	143F203	143F268	143F503		143F573	143F634

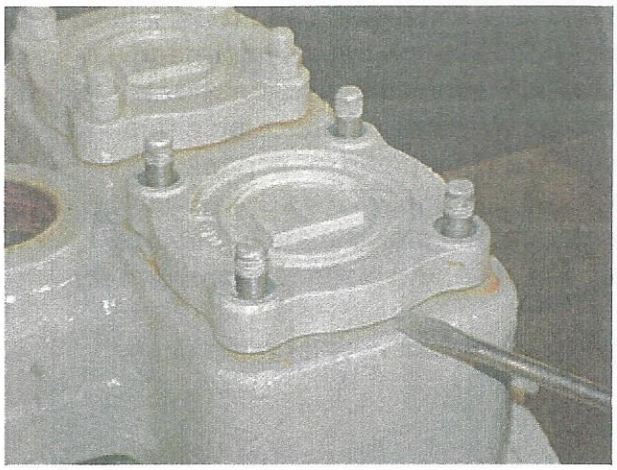

FIGURE 1: Removing the valve cover.

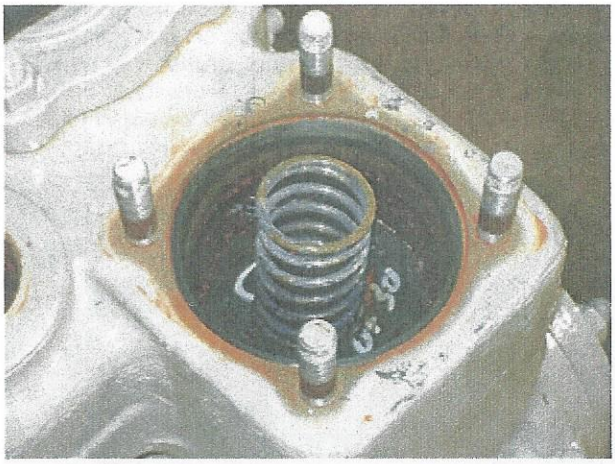

FIGURE 2: The valve cover has been removed showing the valve and valve spring.

The fluid end is equipped with **GEFCO Mudmaster** pistons, liners, piston rods, valves, valve seats and lubricating piston rod stuffing box glands. The most vital units in the efficient operation of the pump are the pistons, liners and valves since these parts are subjected to the greatest abuse from the abrasive-laden mud.

To inspect the valves, remove the valve cover plates [FIGURE 1] and lift the valve springs and valves out [FIGURE 2]. The valve has a renewable rubber insert, which should be replaced when it becomes worn. Leaky valves should be replaced since they may cause a washed out fluid end. If it is necessary to remove the valve seats, they may be pulled by means of the valve seat puller furnished with the drill [FIGURE 3]. When replacing the seat, wash both the seat and the tapered hole with solvent, set the seat in place and drive it down tight using a block of wood. Care should be used in replacing the seats to be sure they are perfectly clean and dry to seal completely.

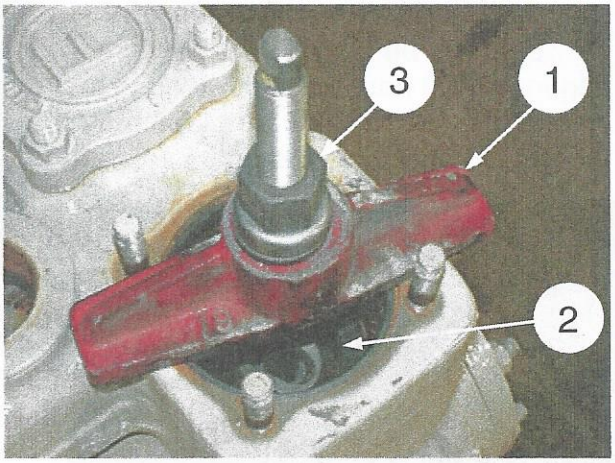

FIGURE 3: Mud Pump Valve Seat Removal; Because of the self locking taper used on this seat, a puller [1] must be used for proper removal. Insert the puller shoulders behind the valve seat [2]. Slowly tighten the nut [3] until the valve seat [2] is disengaged. The valve seat may then be lifted out. **NOTE:** When installing the valve seat, a wooden block should be used and care should be exercised in hammering the seat tightly in place.

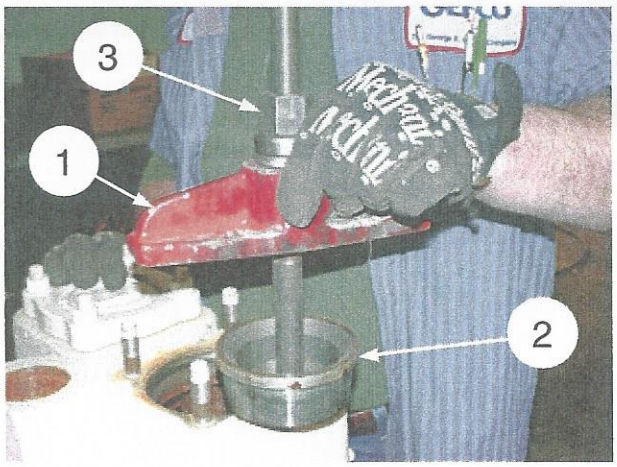

FIGURE 4: Mud Pump Valve Seat Removal; After the puller nut [3] has been tightened sufficiently, the valve seat [2] will release and then the puller assembly [1] and the valve seat [2] can be lifted out as shown.

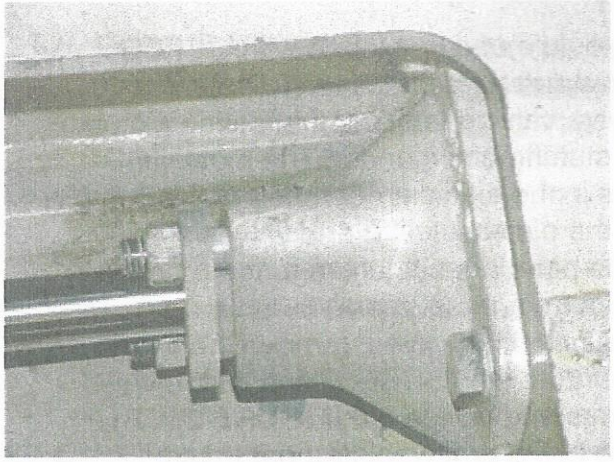

FIGURE 5: Oil stop head.

In order to pull the pistons and rods, it is necessary to remove the cylinder head [FIGURE 8], unlock the piston rod lock nut, which is found behind the oil stop head [FIGURES 5 & 6], and loosen the lubricating packing gland [FIGURE 7]. Unscrew the rods from the crossheads and then remove the rods and pistons from the pump.

The piston cups can now be replaced.

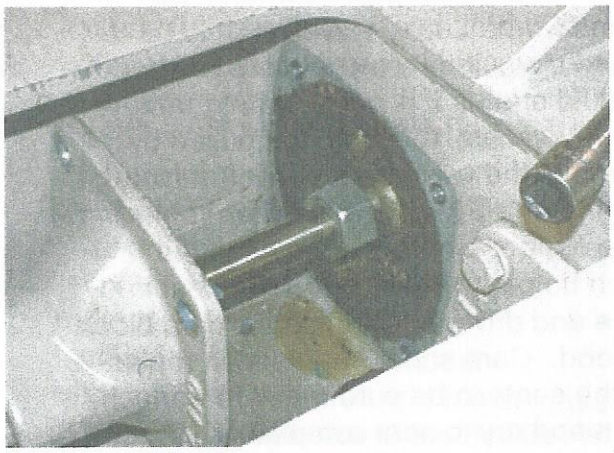

FIGURE 6: Piston rod lock nut.

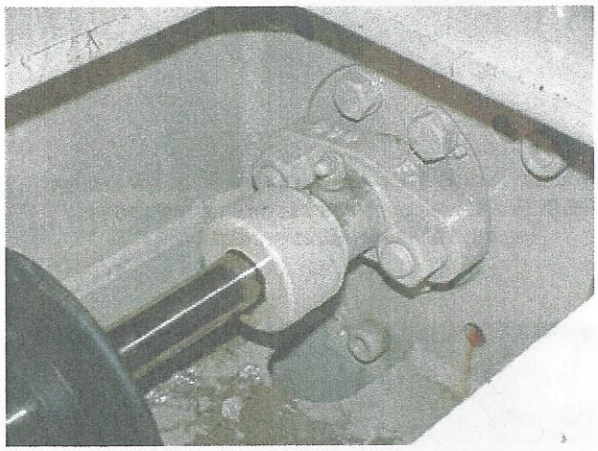

FIGURE 7: Lubricator packing gland.

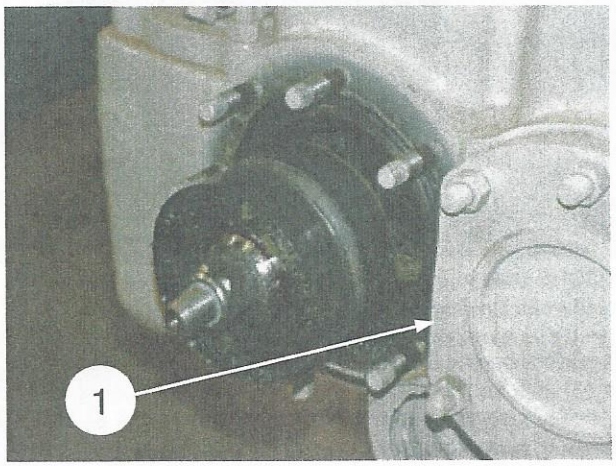

FIGURE 8: Pulling the piston and piston rod. Cylinder head [1].

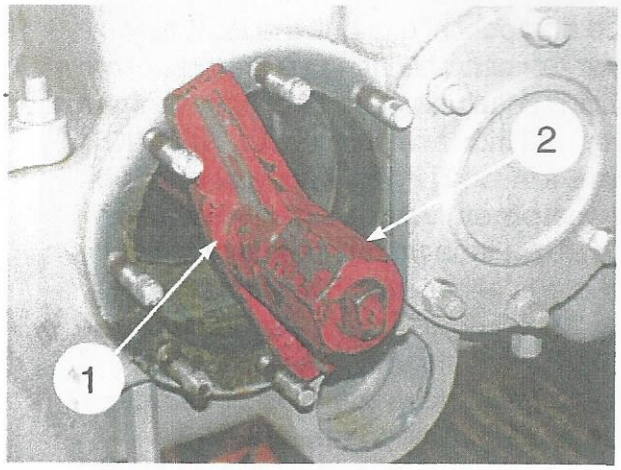

FIGURE 9: Mud Pump Liner Removal; Because of the tightness resulting from the proper installation of this assembly into the pump housing, a liner puller is required for removal. Insert the puller [1] such that its pulling shoulders engage the inboard or back face of the liner. Slowly tighten the puller rod nut [2] until the assembly can be removed.

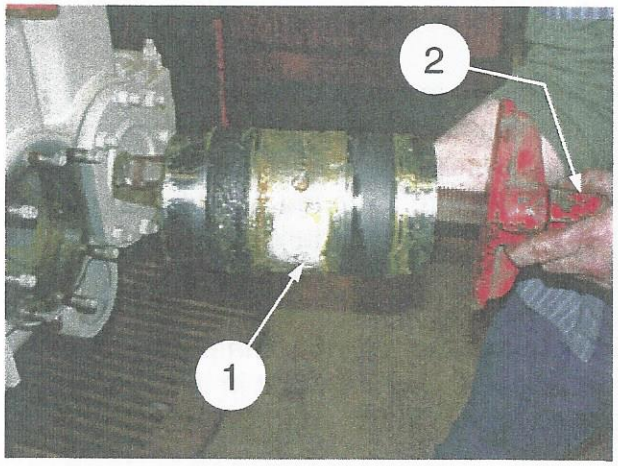

FIGURE 10: Mud Pump Liner Assembly; When the nut [2] on the puller rod has been tightened sufficiently to free the liner assembly [1], the puller and the liner assembly can be lifted out as shown.

Remove the rubber cylinder head seal and the liner retainer ring. The liner can be pulled using the liner puller [FIGURE 9] furnished with the drill. Remove the old rubber liner packer sleeves from the liner [FIGURE 10].

To replace the liners, put new rubber liner packer sleeves on the liner. Grind a 1/8" bevel on the leading edges before putting the sleeves on the liner. This will help the sleeve get started into the bore easier. Coat the liner and sleeves with a generous amount of gun grease. Start the liner and sleeves into the bore. A block of wood may be used to drive the liner and sleeves into the bore if you are unable to push them.

Install the liner retainer ring, a new rubber cylinder head seal and the cylinder head but **DO NOT** tighten the head nuts too tight. **Too much pressure on the liner can cause "bottlenecking" of the liner in the area of the rubber sleeves sufficiently to prevent the piston from passing.** These must be tightened after the pump is in operation and then only enough to stop the fluid from leaking through the "weep" holes in the bottom of the fluid end. **NEVER ADJUST THE HEAD NUTS WHILE THE PUMP IS RUNNING.**

When screwing the piston rods into the crossheads, always leave 2 to 3 threads exposed on the rod behind the lock nut when it is locked down [FIGURE 6].

NOTE: Anytime the fluid end is drained, remove the suction valve cover plates and fill the cavities with water to prime the pump. This will greatly reduce the possibility of damage to the pistons, rods and liners due to dry start-up.

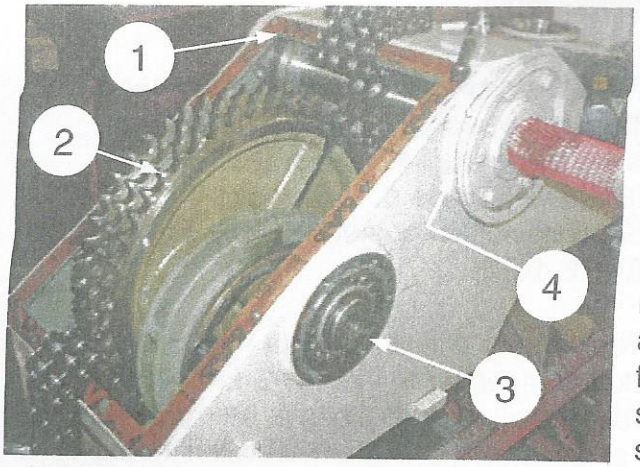

FIGURE 11: Preparation for removing the eccentric sprocket. The cover [not shown] is held in place by bolts at point [1]. The chain is disconnected at a cotter pin type connector link. To remove the eccentric sprocket [2], remove the bolts and retainer plates [3]. Remove the jackshaft bearing housing [4] to remove the jackshaft.

If applicable, remove the mud pump drive *case and clutch. To pull the clutch, re*-move the clutch shifting yoke and unscrew the clutch adjusting yoke to expose the set screws, which are in the hub. **CAUTION: There are two [2] set screws, one lock-ing the other.** *After the set screws are re-moved, replace the clutch adjusting yoke* and use a gear puller to remove the hub from the shaft. Remove the key from the shaft and pull the clutch bowl and the sprocket. Remove the drive case adapter plate from the bearing housing.

To remove the jackshaft, it is necessary to remove the bearing housings [FIGURE 11], one on each side, which can be re-moved using two of the capscrews in the puller holes provided. Lift the jackshaft to clear the pinion teeth and remove.

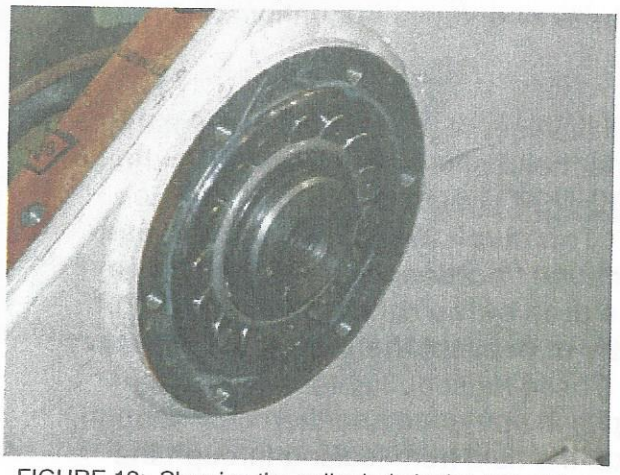

FIGURE 12: Showing the puller hole in the end of the eccentric sprocket shaft. The tube used with the puller must clear the outside diameter of the bearing.

Before removing the eccentric shaft, be sure the piston rods have been removed from the crossheads. To remove the ec-centric shaft, first remove the retainer plates [FIGURE 11] and the locking key between the eccentric sprocket and the shaft. The key is held in with a wire. The shaft can now be pulled from the power end housing using a puller bolt in the 1"-8 NC tapped hole in the shaft [FIGURE 12 & 13].

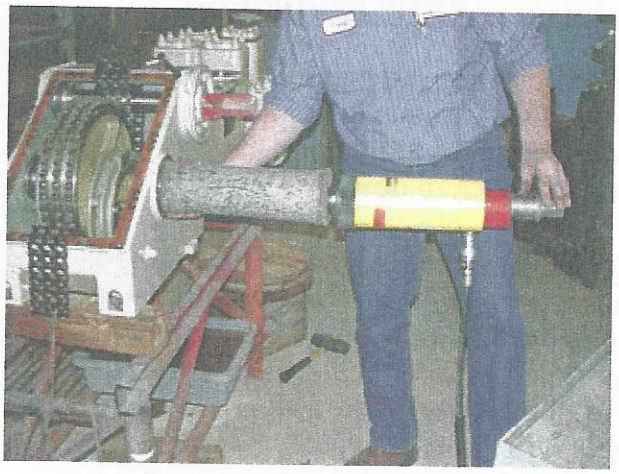

FIGURE 13: Preparing to pull the eccentric sprocket shaft.

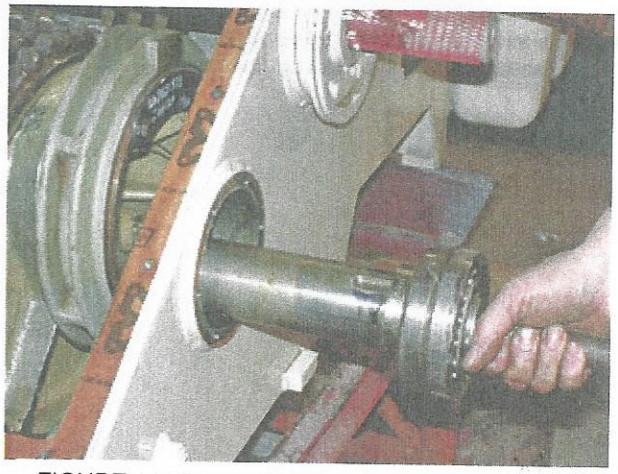

FIGURE 14: Removing the eccentric sprocket shaft.

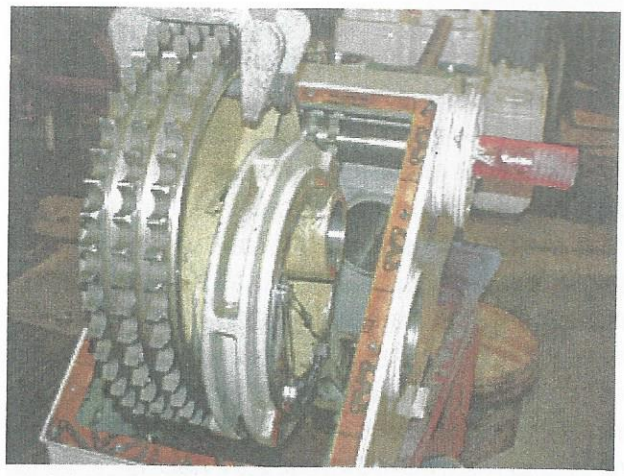

FIGURE 15: After the eccentric shaft is removed [FIGURE 14], the eccentric sprocket, connecting rods and crosshead assembly may be removed from the main frame.

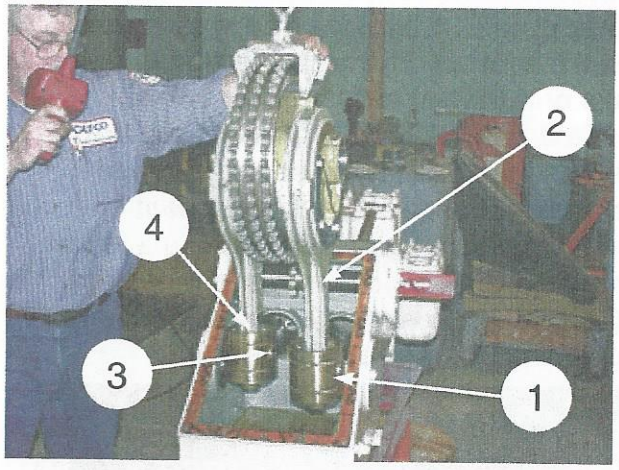

FIGURE 16: The crossheads [1] are retained to the connecting rods [2] by a set screw into the shaft [3]. These set screws do not appear in the photograph but are visible from a point [4].

CLEARANCE TABLE	
COMPONENT PART	
Eccentric Bushings	
a. Good condition	0.005" - 0.014"
b. Worn out	0.030" or making noise
Crosshead Pin Bushings	
a. Good condition	0.0005" - 0.001"
b. Worn out	0.007" or making noise
Crosshead to Slide	
a. Good condition	0.005" - 0.012"
b. Worn out	0.060" or making noise

The eccentric sprocket, connecting rods and crossheads may be removed from the power end housing after the shaft has been removed [FIGURE 15].

Inspect and replace all worn parts and always install new grease seals when reassembling the power end of the mud pump. When replacing the shaft and eccentric sprocket, be sure all bearings and spacers are shouldered up to eliminate any side play in the eccentric sprocket. The bearing and spacers may be replaced on the opposite side of the pump by tapping with a soft hammer or sometimes it will simplify the job to heat the bearing in oil or by induction heating to expand it. To adjust the bearings, tighten the bolts on the bearing retainer plates evenly on both sides without any gaskets until the bearings bind; then loosen the bolts evenly on both sides until the bearings are tight but not binding. With a feeler gauge, determine how many gaskets are required.

Install the jackshaft and line up the pinion sprocket with the eccentric sprocket prior to installing the drive chain. Adjust the bearings on the jackshaft as noted above.

When the clutch hub and back plate are installed, if applicable, be sure to leave at least 1/32" clearance between the clutch hub and the clutch bowl when the pinion is properly aligned with the eccentric sprocket.

FIGURE 1: Removing the valve cover.

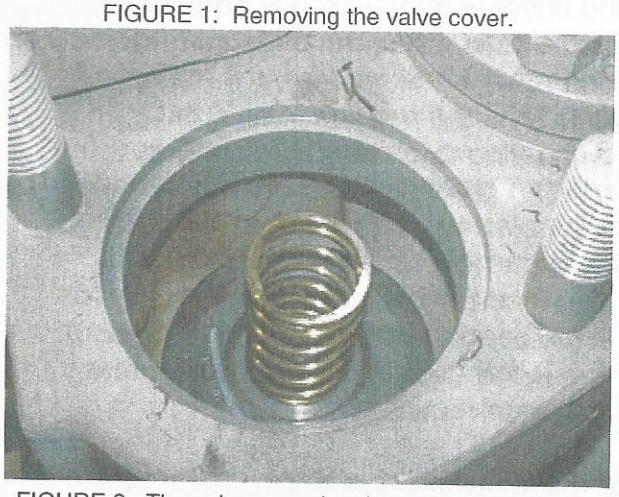

FIGURE 2: The valve cover has been removed showing the valve and valve spring.

The fluid end is equipped with **GEFCO Mudmaster** pistons, liners, piston rods, valves, valve seats and lubricating piston rod stuffing box glands. The most vital units in the efficient operation of the pump are the pistons, liners and valves since these parts are subjected to the greatest abuse from the abrasive-laden mud.

To inspect the valves, remove the valve cover plates [FIGURE 1] and lift the valve springs and valves out [FIGURE 2]. The valve has a renewable rubber insert, which should be replaced when it becomes worn. Leaky valves should be replaced since they may cause a washed out fluid end. If it is necessary to remove the valve seats, They may be pulled by means of the valve seat puller furnished with the drill [FIGURE 3]. When replacing the seat, wash both the seat and the tapered hole with solvent, set the seat in place and drive it down tight using a block of wood. Care should be used in replacing the seats to ensure they are perfectly clean and dry to seal completely.

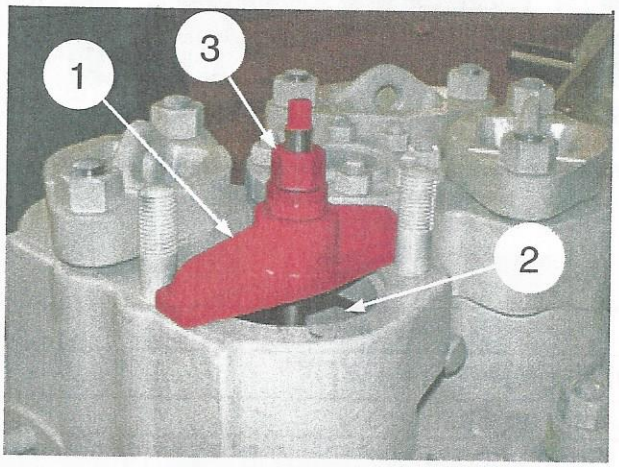

FIGURE 3: Mud Pump Valve Seat Removal; Because of the self locking taper used on this seat, a puller [1] must be used for proper removal. Insert the puller shoulders behind the valve seat [2]. Slowly tighten the nut [3] until the valve seat [2] is disengaged. The valve seat may then be lifted out. **NOTE:** When installing the valve seat, a wooden block should be used and care should be exercised in hammering the seat tightly in place.

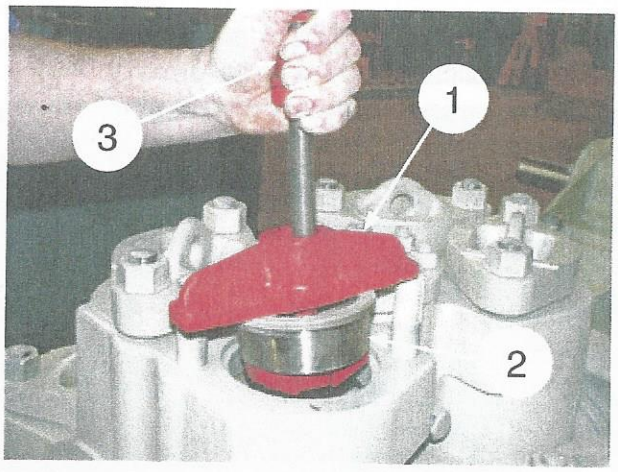

FIGURE 4: Mud Pump Valve Seat Removal; After the puller nut [3] has been tightened sufficiently, the valve seat [2] will release and then the puller assembly [1] and the valve seat [2] can be lifted out as shown.

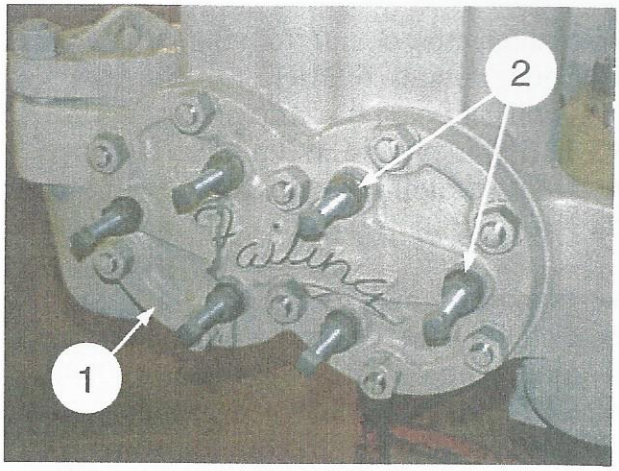

FIGURE 5: Cylinder head [1] with liner adjusting bolts and lock nuts [2].

To pull the pistons and rods, it is necessary to loosen the liner adjusting bolts and lock nuts, remove the cylinder head [FIGURE 5], unlock the piston rod lock nut, which is found in the inspection cavity [FIGURES 6 & 7], and loosen the oil stop head and the lubricating packing gland [FIGURE 6]. Unscrew the rods from the crossheads and then remove the rods and pistons from the pump.

The piston cups can now be replaced.

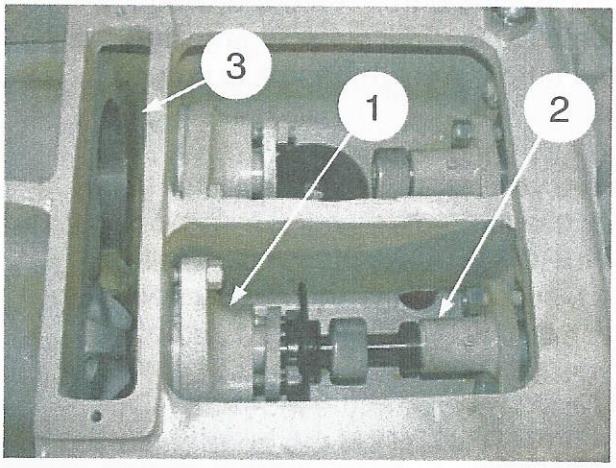

FIGURE 6: Oil stop head [1], lubricator packing gland [2] and inspection cavity [3].

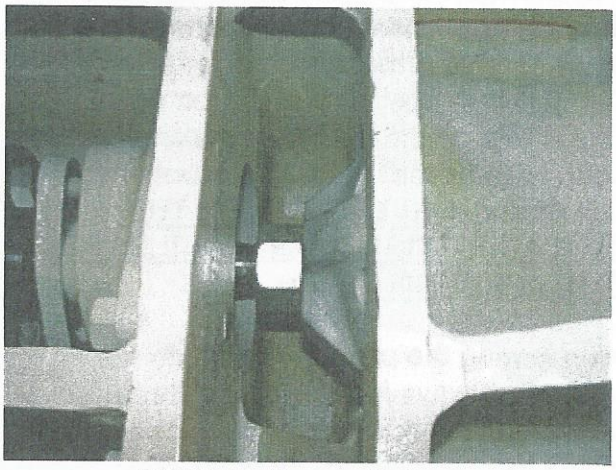

FIGURE 7: Piston rod lock nut.

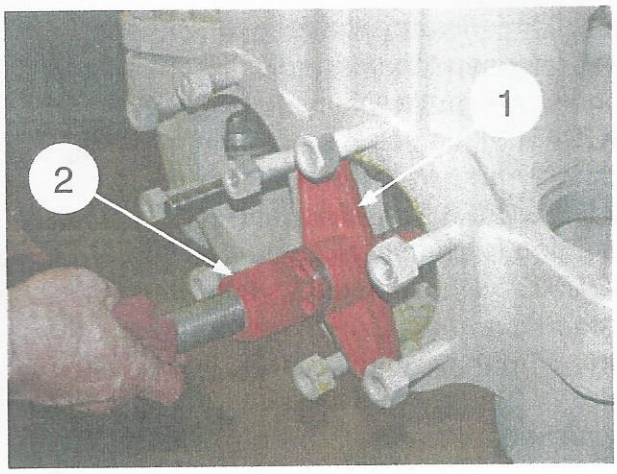

FIGURE 8: Mud Pump Liner Removal; Because of the tightness resulting from the proper installation of this assembly into the pump housing, a liner puller is required for removal. Insert the puller [1] such that its pulling shoulders engage the inboard or back face of the liner. Slowly tighten the puller rod nut [2] until the assembly can be removed.

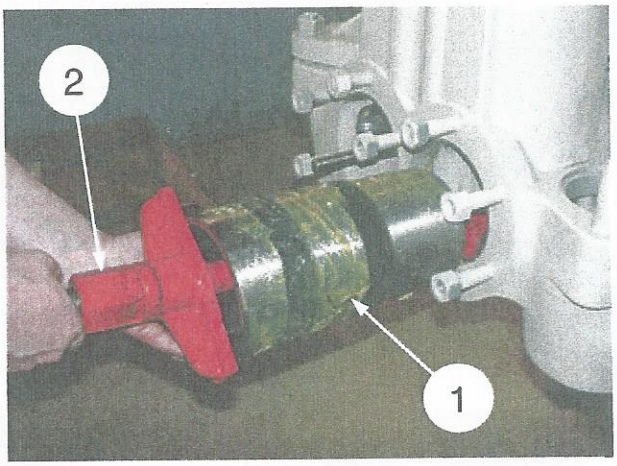

FIGURE 9: Mud Pump Liner Assembly; When the nut [2] on the puller rod has been tightened sufficiently to free the liner assembly [1], the puller and the liner assembly can be lifted out as shown.

NOTE:

Anytime the fluid end is drained, remove the suction valve cover plates and fill the cavities with water to prime the pump. This will greatly reduce the possibility of damage to the pistons, rods and liners due to dry start-up.

Remove the liner clamp from behind the fluid cylinder head [FIGURE 5]. The liner can be pulled using the liner puller [FIGURE 8] furnished with the drill. Remove the old rubber liner sleeves from the liner [FIGURE 9].

To replace the liners, put new rubber liner sleeves on the liner. Grind a 1/8" bevel on the leading edges before putting the sleeves on the liner. This will help the sleeve get started into the bore easier. Coat the liner and sleeves with a generous amount of gun grease. Start the liner and sleeves into the bore. A block of wood may be used to drive the liner and sleeves into the bore if you are unable to push them.

Before you install the fluid cylinder head, back the liner adjusting bolts and lock nuts [FIGURE 5] out. Install the fluid cylinder head, tighten the cylinder head retaining nuts and then **CAREFULLY** tighten the liner adjusting bolts [FIGURE 5] against the liner and tighten the lock nuts. **DO NOT OVERTIGHTEN the liner adjusting bolts since too much pressure on the liner can cause "bottlenecking" of the liner in the area of the rubber sleeves sufficiently to prevent the piston from passing.** These must be tightened after the pump is in operation and then only enough to stop the fluid from leaking through the "weep" holes in the bottom of the fluid end. **NEVER TIGHTEN THE LINER ADJUSTING BOLTS WHILE THE PUMP IS RUNNING.**

When screwing the piston rods into the crossheads, always leave 2 to 3 threads exposed on the rod behind the lock nut when it is locked down [FIGURE 6].

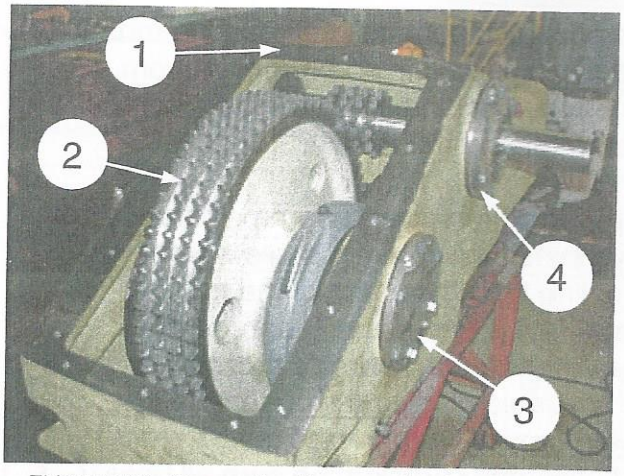

FIGURE 10: Preparation for removing the eccentric sprocket. The cover [not shown] is held in place by bolts at point [1]. The chain is disconnected at a cotter pin type connector link. To remove the eccentric sprocket [2], remove the bolts and retainer plates [3]. Remove the jackshaft bearing retainer [4] to remove the jackshaft.

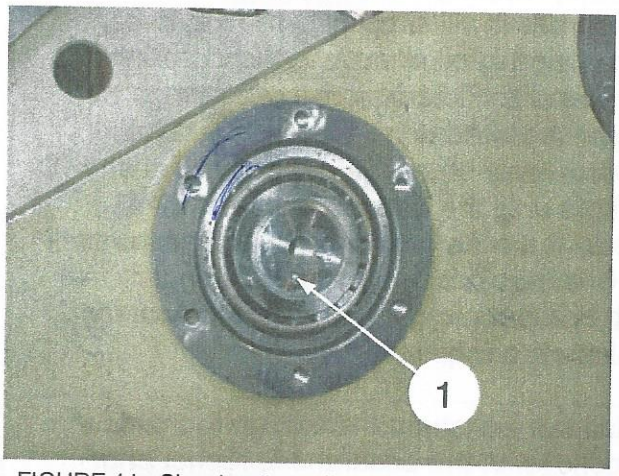

FIGURE 11: Showing the puller hole in the end of the eccentric sprocket shaft and the 1/4" identification hole [1]. The tube used with the puller must clear the outside diameter of the bearing.

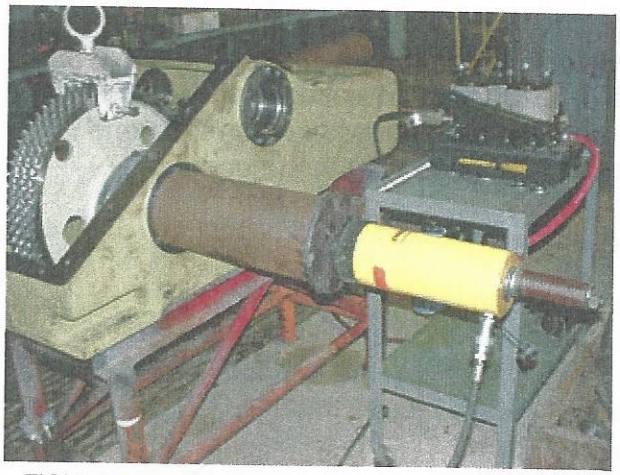

FIGURE 12: Preparing to pull the eccentric sprocket shaft.

If applicable, remove the mud pump drive case and clutch. To pull the clutch, remove the clutch shifting yoke and unscrew the clutch adjusting yoke to expose the set screws, which are in the hub. **CAUTION: There are two [2] set screws, one locking the other.** After the set screws are removed, replace the clutch adjusting yoke and use a gear puller to remove the hub from the shaft. Remove the key from the shaft and pull the clutch bowl and the sprocket. Remove the drive case adapter plate from the bearing housing.

To remove the jackshaft, it is necessary to remove the bearing retainers [FIGURE 10], one on each side, which can be removed using two of the capscrews in the puller holes provided. Lift the jackshaft to clear the pinion teeth and remove.

Before removing the eccentric shaft, be sure the piston rods have been removed from the crossheads. To remove the eccentric shaft, first remove the retainer plates [FIGURE 10]. Using a puller bolt in the 3/4"-16 NF tapped hole, the shaft can now be pulled from the power end housing [FIGURE 11 & 12]. The shaft **MUST** be removed from the side of the pump which has the tapped hole in the end of the shaft. This is due to a blind keyway in the sprocket. In the event that both ends are tapped, the key end of the shaft is designated by a 1/4" hole next to the tapped hole [FIGURE 11].

FIGURE 13: After the eccentric shaft is removed, the eccentric sprocket, connecting rods and crosshead assembly may be removed from the main frame.

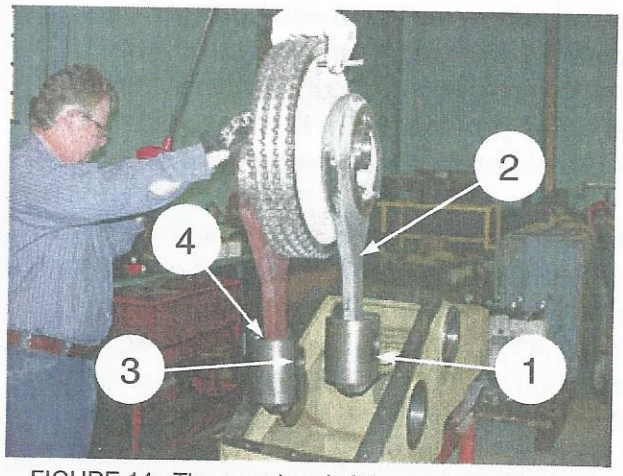

FIGURE 14: The crossheads [1] are retained to the connecting rods [2] by a set screw into the shaft [3]. These set screws do not appear in the photograph but are visible from a point [4].

The eccentric sprocket, connecting rods and crossheads may be removed from the power end housing after the shaft has been removed [FIGURE 13].

Inspect and replace all worn parts and always install new grease seals when reassembling the power end of the mud pump. If it is necessary to rebore the crosshead slides, oversize crossheads are available. See the chart on the following page. When replacing the shaft and eccentric sprocket, be sure all bearings and spacers are shouldered up to eliminate any side play in the eccentric sprocket. The bearing and spacers may be replaced on the opposite side of the pump by tapping with a soft hammer or sometimes it will simplify the job to heat the bearing in oil or by induction heating to expand it. To adjust the bearings, tighten the bolts on the bearing retainer plates evenly on both sides without any gaskets until the bearings bind; then loosen the bolts evenly on both sides until the bearings are tight but not binding. With a feeler gauge, determine how many gaskets are required.

Install the jackshaft and line up the pinion sprocket with the eccentric sprocket prior to installing the drive chain. Adjust the bearings on the jackshaft as noted above.

When the clutch hub and back plate are installed, if applicable, be sure to leave at least 1/32" clearance between the clutch hub and the clutch bowl when the pinion is properly aligned with the eccentric sprocket.

CLEARANCE TABLE	
COMPONENT PART	
Eccentric Bushings	
a. Good condition	0.006" - 0.015"
b. Worn out	0.030" or making noise
Crosshead Pin Bushings	
a. Good condition	0.0005" - 0.001"
b. Worn out	0.007" or making noise
Crosshead to Slide	
a. Good condition	0.010" - 0.017"
b. Worn out	0.060" or making noise

SECTION XIV
FM-45
Overhauling the Power End

FM-45 CROSSHEADS			
OVERSIZE	BORE DIAMETER	PART NO. L.H.	PART NO. R.H
STANDARD	6.005" -0.003"	100F684	100F652
0.010"	6.015" -0.003"	158F627	158F628
0.020"	6.025" -0.003"	167F802	167F803
0.030"	6.035" -0.003"	167F804	167F805
0.040"	6.045" -0.003"	167F806	167F807
0.050"	6.055" - 0.003"	167F808	167F809

SECTION XV
Torque Requirements

	L-100-C		FM-45	
	ft-lbs	kg-m	ft-lbs	kg-m
Fluid Cylinder to Frame Connecting Stud Nuts	75	10.37	260	35.94
Fluid Cylinder Head Stud Nuts	see below		260	35.94
Fluid Cylinder Set Screws			see below	
Suction Manifold Flange Nuts			150	20.74
Discharge Manifold Flange Nuts			150	20.74
Piston Rod Nut to Crosshead	400	55.3	580	80.19
Piston Rod Nut to Piston	260	35.94	260	35.94
Eccentric Shaft Retainer Plate	30	4.15	75	10.37
Hood	17	2.35	75	10.37
Hand Hole Plate			30	4.15
Jackshaft Retainer Plate	30	4.15	75	10.37
Oil Stop Head Flange	75	10.37	75	10.37
Valve Cover Plate	580	80.19	580	80.19
Mounting Bolts	150	20.74	260	35.94

NOTE: Adjust the packing gland nuts on the piston rod packing glands and the adjusting screws or nuts on the liners very carefully with the pump stopped. They should be only tight enough to prevent leakage. Excessive tightening will cause rapid wear of the packing and rods. The liners can be "bottlenecked" by excessive tightening and this will cause the piston to seize the inside of the liner.

SECTION XVII
Pump Specifications and Parts Lists
Model L-100-C
Mudmaster® 4-1/2" x 5" Slush Pump

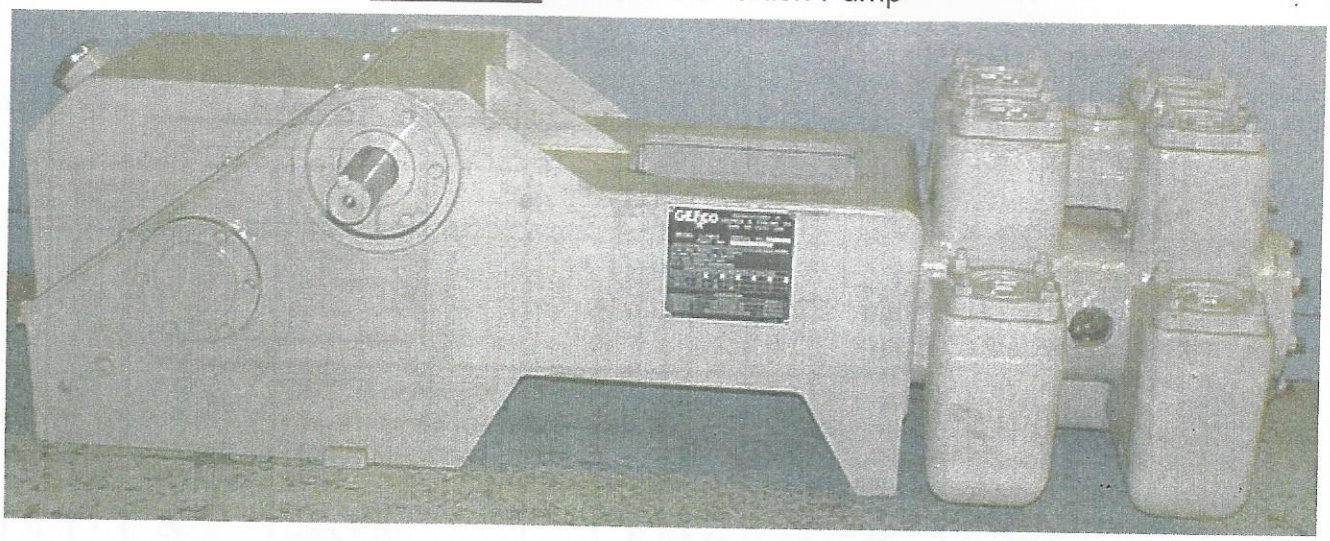

The **GEFCO** Model L-100-C is a duplex reciprocating type power slush pump designed for use on lightweight shot hole and core drills.

The power end is a lightweight, fabricated steel unit with integral jackshaft and eccentric bearing supports. A removable cover is supplied for easy accessibility to the power end mechanism. The eccentrics and main sprockets are cast in one piece permitting the use of a straight steel eccentric shaft. The connecting rods feature renewable bronze eccentric bushings and the crossheads are solid with reinforcement around the load areas. The jackshaft and eccentric shaft are mounted on ball and roller bearings respectively and the power is transmitted through a triple roller chain. The fluid end is a one-piece casting with conventional pot type valves and cover plates secured with bolts. The suction and discharge ports are screw type.

All bearings and chain are splash lubricated from an oil reservoir in the power end. **GEFCO** lubricator packing glands provide positive lubrication for the piston rods. The Model L-100-C pump is equipped with **GEFCO Mudmaster®** pistons,

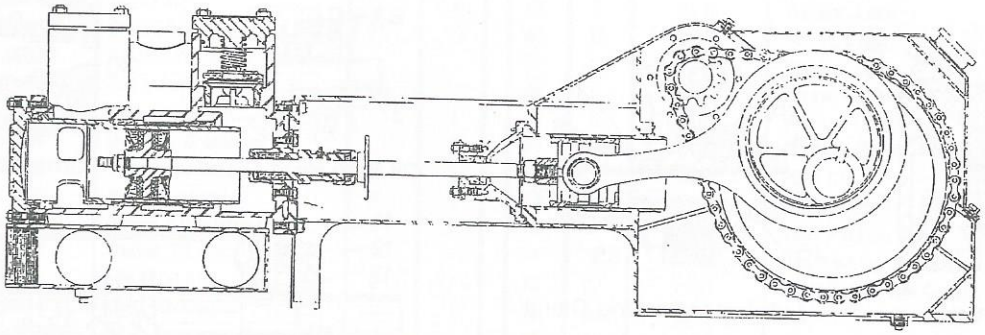

SPECIFICATIONS

SIZE, INS.		Maximum Pressure [Pounds per Square Inch	DISPLACEMENT		Brake H.P. at Max. Pressure	R.P.M.		Maximum Plunger Load [Lbs.]	PIPE SIZE, INS.		Approximate Weight of Pump [Lbs.]	APPROX. O.A. DIM., INS.		
Diameter of Fluid Cylinder	Length of stroke		Displacement in U.S. Gals. Per Minute [Rods Deducted]	Approximate Barrels per Hour [42 U.S. Gals.]		Crankshaft	Jackshaft		Suction	Discharge		Height	Width of Mud End	Length
MODEL L-100-C--450 POUNDS WORKING PRESSURE---800 POUNDS TEST PRESSURE														
4 1/2	5	275	63.8-120	94.9-171	12.5-22.5	50-90	240-450	4380	3	2	1015	18 1/4	24 1/4	60
4		350	50.6-94.4	74.9-135										
3 1/2		450	40.2-72.3											

SECTION XVII
Pump Specifications and Parts Lists
Model L-100-C
Mudmaster® 4-1/2" x 5" Slush Pump

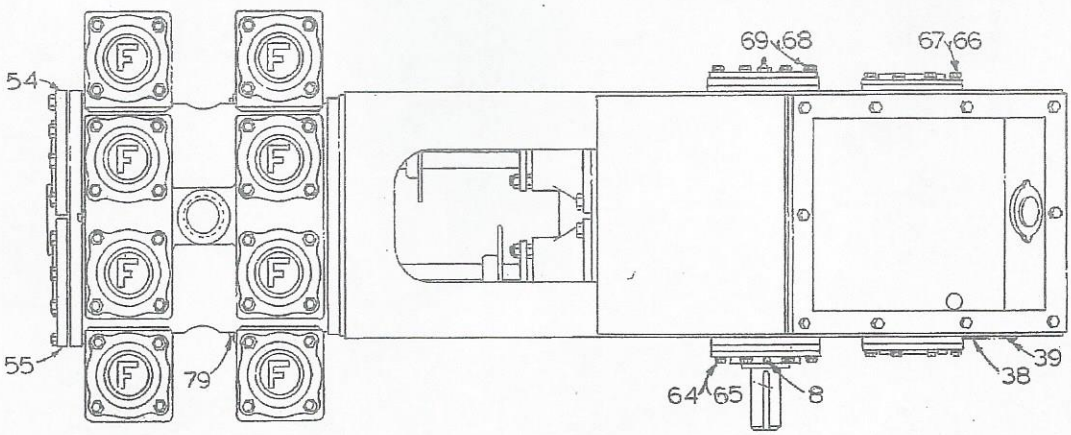

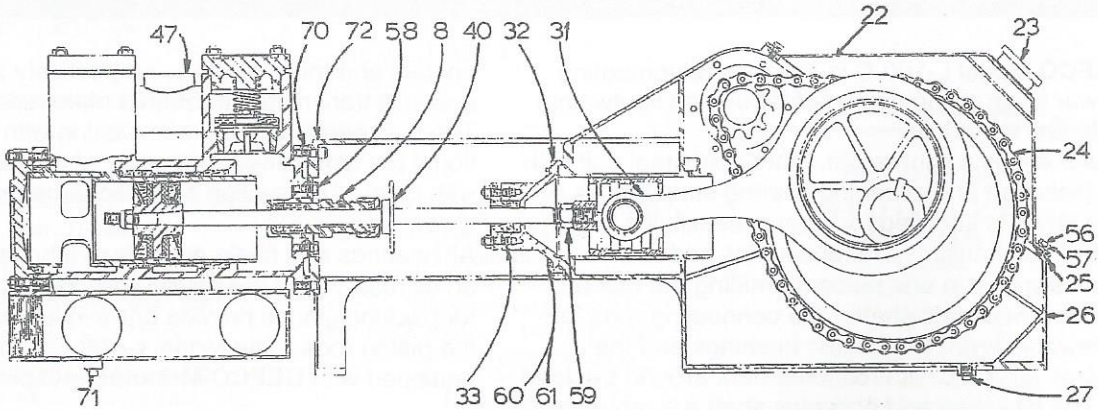

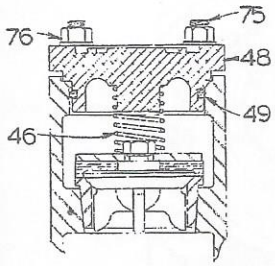

Fluid Valve

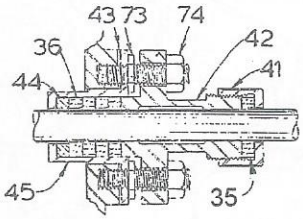

Lubricator Packing Gland

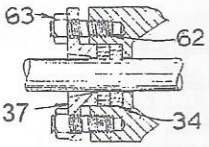

Oil Stop Head Gland

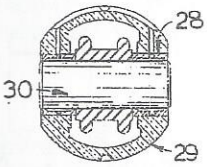

Crosshead

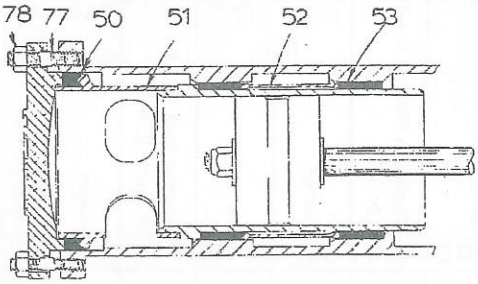

Liner Assembly

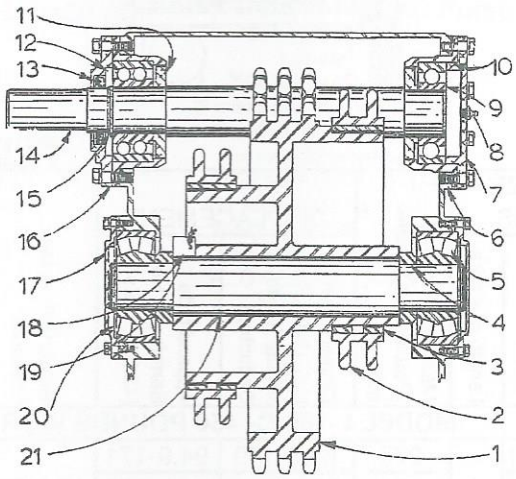

Power End Section

SECTION XVII
Pump Specifications and Parts Lists
Model L-100-C
Mudmaster® 4-1/2" x 5" Slush Pump

Ref. No.	No. Req.	Part Number	Description	Weight Lbs.	Weight Oz.
1	1	L-108	Sprocket, Eccentric	100	
2	2	L-122	Rod, Connecting	18	12
3	2	L-127	Bushing, Eccentric	3	14
4	2	L-119	Spacer, Ecc. Shaft Bearing		14
5	2	XSK-22311	Bearing, Ecc. Shaft	5	2
6	4	L-141*	Gasket, Jackshaft Ret.		
7	1	L-115	Plate, Jackshaft Cover	1	3
8	3	XAC-1610	Fitting, Grease		
9	1	XSK-6310	Bearing, Jackshaft	2	6
10	2	L-117	Housing, Bearing	3	2
11	2	L-118	Spacer, Bearing		7
12	1	XSK-5310	Bearing, Jackshaft	4	1
13	1	XCR-19382	Seal, Grease		4
14	1	L-123	Jackshaft, Pump**	18	8
14-A	1	L-123-A	Jackshaft, Pump**	54	
14-B	1	L-123-B	Jackshaft, Pump**	51	
14-C	1	L-123-C	Jackshaft, Pump**	54	
15	1	XWT-5100-196	Ring, Snap		1
16	1	L-113	Plate, Jackshaft End	1	4
17	2	L-124	Plate, Ecc. Shaft Ret.	1	14
18	1	L-125-1	Key, Eccentric Shaft		2
19	1	L-125-2	Wire, Lock		
20	2	XWT-5100-215	Ring, Snap		1
21	1	L-125	Shaft, Eccentric	19	
22	1	157F132	Cover, Power End	10	8
23	1	XFM-A8TZ-9030-A	Cap, Filler		4
24	1	XDC-80T54	Chain, Drive	21	12
25	1	L-142-A*	Gasket, Power End Cover		
26	1	L-111-B	Case, Power	190	
27	1	14366	Plug, Drain		2
28	4	L-128	Bushing, Crosshead		3
29	2	L-129	Crosshead, Pump	7	8
30	2	L-114	Pin, Crosshead	1	8
31	2	L-120	Screw, Crosshead Lock		2
32	2	L-149*	Gasket, Oil Stop Head		
33	2	L-110	Head, Oil Stop	2	7
34	4	XGD-60-H-2	Ring, Packing		1
35	2	XGD-60-H-2	Ring, Packing		1
36	8	XGD-60-H-2	Ring, Packing		1
37	2	L-116	Gland, Oil Stop Head		5
38	1	L-143	Plate, Name		1
39	4	L-145	Screw, Name Plate		

Ref. No.	No. Req.	Part Number	Description	Weight Lbs.	Weight Oz.
40	2	L-131	Baffle, Piston Rod		5
41	2	869-F	Nut, Packing Gland		8
42	2	864-FA	Gland, Lubr. Packing	2	3
43	2	L-140*	Gasket, Stuffing Box		
44	2	XGD-FF-317	Ring, Mud End Junk		3
45	2	L-126	Box, Piston Rod Stuffing	1	7
46	8	XGD-78-A-171	Spring, Valve		1
47	1	L-112-B	Cylinder, Fluid	370	
48	8	L-106-A	Plate, Valve Cover	2	7
49	8	XNC-NS-342	Ring, "O"		1
50	2	L-104	Seal, Cylinder Head		5
51	2	L-105	Ring, Liner Ret.	3	2
52	2	L-107	Spacer, Liner Sleeve	2	4
53	4	L-102	Sleeve, Liner Packer		6
54	1	L-109-L	Head, L.H. Cylinder	4	5
55	1	L-109-R	Head, R.H. Cylinder	4	5
56	10	5C6-B	Screw, Cap		
57	10	5-LW	Washer, Lock		
58	8	8C6-B	Screw, Cap		
59	2	14C-N	Nut, Piston Rod		
60	8	8C12-B	Screw, Cap		
61	8	8-LW	Washer, Lock		
62	4	L-132	Stud, Oil Stop Head Gland		2
63	4	8C-N	Nut		
64	6	6C14-B	Screw, Cap		
65	6	6-LW	Washer, Lock		
66	12	6C8-B	Screw, Cap		
67	12	6-LW	Washer, Lock		
68	6	6C12-B	Screw, Cap		
69	6	6-LW	Washer, Lock		
70	10	8C12-C	Screw, Cap		
71	1	14367	Plug, Drain		1
72	10	8-LW	Washer, Lock		
73	4	L-133	Stud, Packing Gland		4
74	4	F-909	Nut, Packing Gland Stud		2
75	32	L-134	Stud, Valve Plate Cover		3
76	32	8C-N	Nut		
77	14	L-134	Stud		3
78	14	8C-N	Nut		
79	1	14090-A	Plug, Drain		1
79	4	109F670	Plug, Drain		1
		L-148-A	Kit, Gasket		

**Included in Gasket Kit No. L-148-A.*
Note: Valve assemblies, piston assemblies, piston rods and liners are not included in this parts list. Please refer to the following pages in this section for information concerning these parts.

***Check for proper jackshaft number when re-ordering.*

SECTION XVII
Pump Specifications and Parts Lists
Model FM-45
Mudmaster® 5" x 6-1/4" Slush Pump

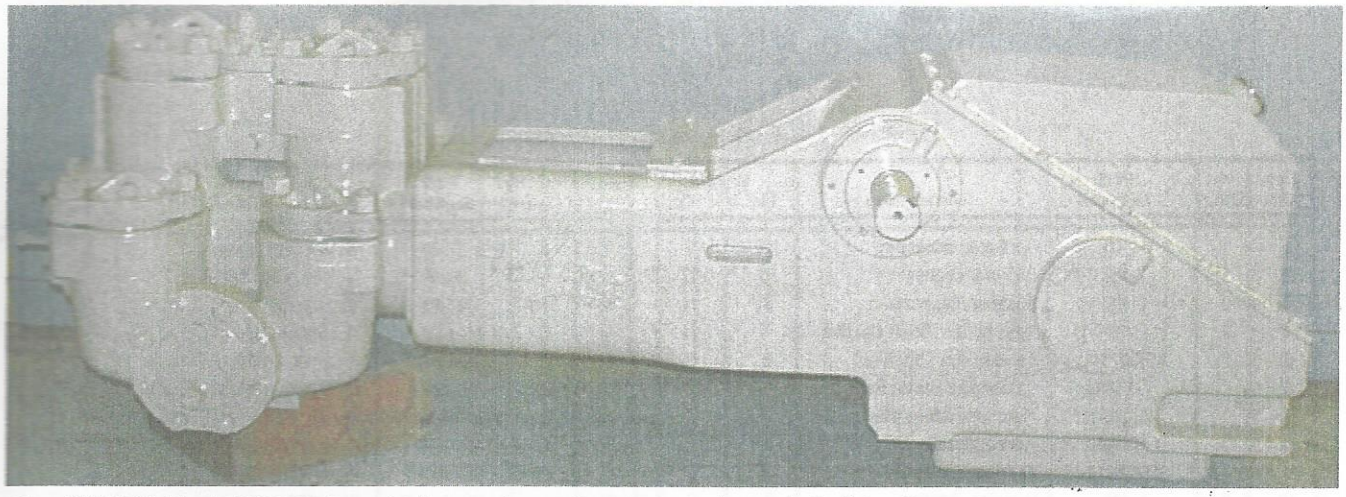

The **GEFCO** Model FM-45 is a duplex reciprocating type power slush pump designed for maximum volume without sacrifice of working pressure and compactness.
The power end is a rugged, one-piece unit with integral supports for the jackshaft and eccentric shaft bearings. The cover is removable for easy access to the power end mechanism. The main sprocket and the eccentrics are cast in one piece and keyed to a straight alloy steel shaft. These shafts are roller bearing mounted and power is transmitted by a high speed quadruple roller chain.
The connecting rods are one-piece steel with renewable eccentric bushings and bronze crosshead bushings. The one-piece skirt type cast alloy crossheads are reinforced at all load areas.
The fluid end of the FM-45 is a one-piece casting with conventional pot type valves. Steel studs secure the valve covers, flanges and plates to the fluid end and the fluid end to the power end.
All the bearings are sealed in individual, pressure gun lubricated housings. The eccentrics, chain, crossheads and pins are splash lubricated from the power end reservoir through normal movement of the parts.
GEFCO lubricator type packing glands provide positive lubrication for the piston rods. This pump is equipped with **GEFCO Mudmaster®** pistons, hardened liners, rods and valves

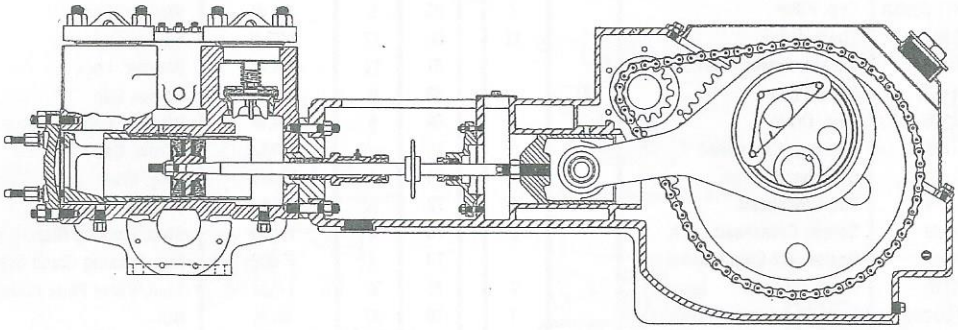

SPECIFICATIONS

SIZE, INS.		Maximum Pressure [Pounds per Square Inch	DISPLACEMENT		Brake H.P. at Max. Pressure	R.P.M.		Maximum Plunger Load [Lbs.]	PIPE SIZE, INS.		Approximate Weight of Pump [Lbs.]	APPROX. O.A. DIM., INS.		
Diameter of Fluid Cylinder	Length of stroke		Displacement in U.S. Gals. Per Minute [Rods Deducted]	Approximate Barrels per Hour [42 U.S. Gals.]		Crankshaft	Jackshaft		Suction	Discharge		Height	Width of Mud End	Length
MODEL FM-45--900 POUNDS WORKING PRESSURE---1800 POUNDS TEST PRESSURE														
5	6 1/4	310	104-208	149-297	23-46	50-100	236-473	6320	4	2	2340	26 9/16	32 1/4	80 4/5
4 1/2		385	84-168	120-240										
4		492	66-132	94-188										
3 1/2		646	50-100	71-143										
3		895	36-72	52-103	22.5-45									

SECTION XVII

Pump Specifications and Parts Lists

Model FM-45

Mudmaster® 5" x 6-1/4" Slush Pump

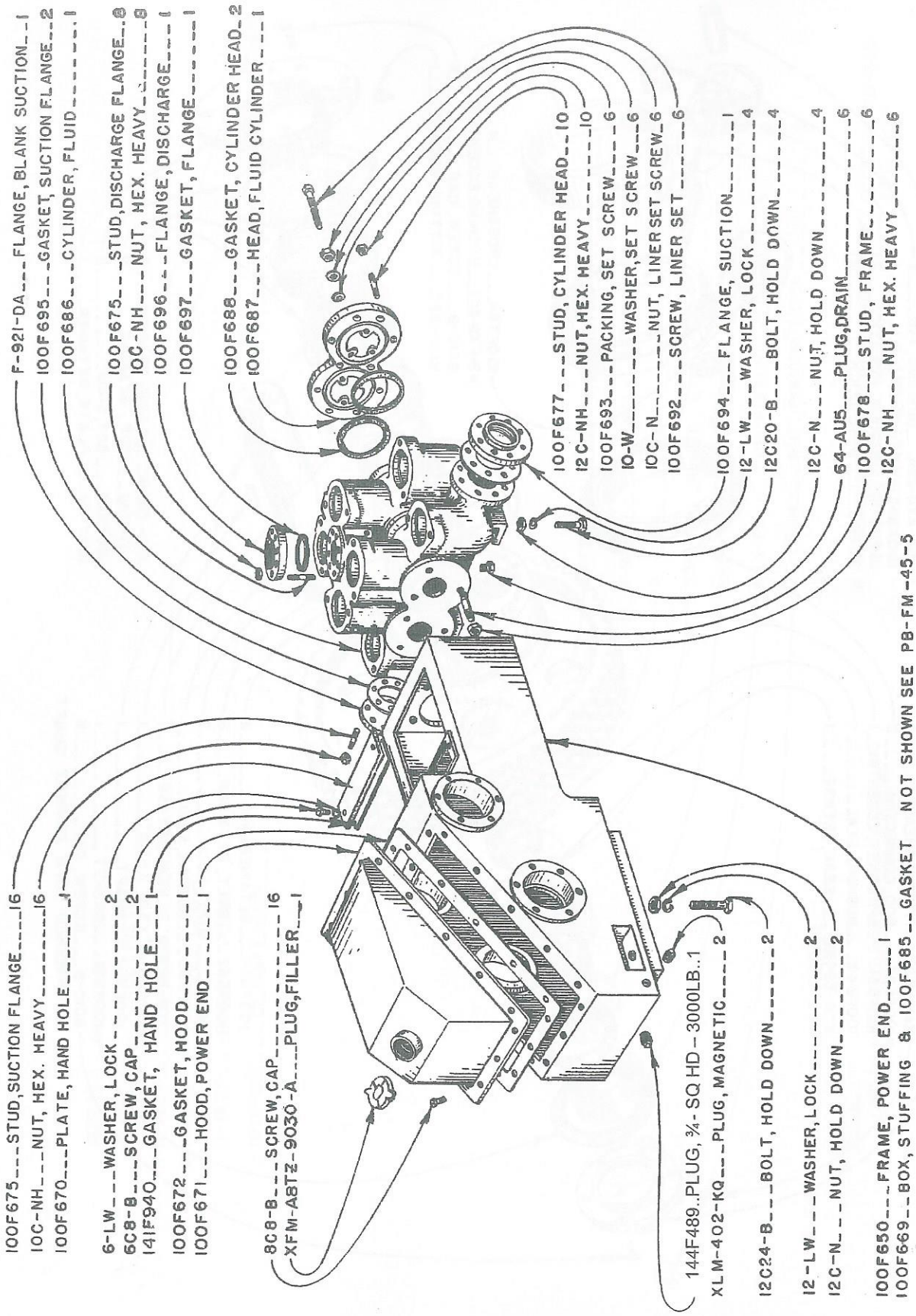

SECTION XVII

Pump Specifications and Parts Lists

Model FM-45

Mudmaster® 5" x 6-1/4" Slush Pump

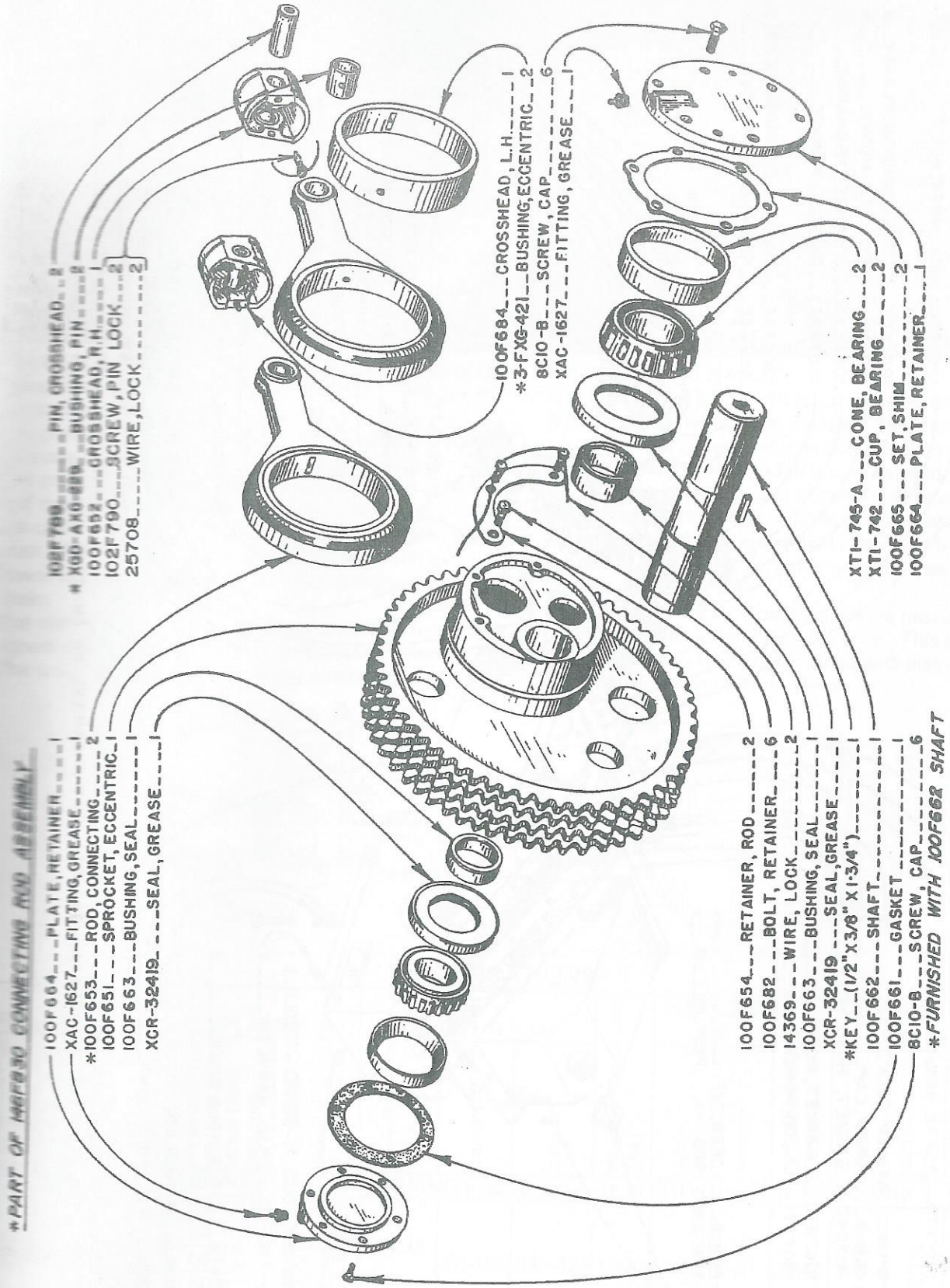

SECTION XVII

Pump Specifications and Parts Lists

Model FM-45

Mudmaster® 5" x 6-1/4" Slush Pump

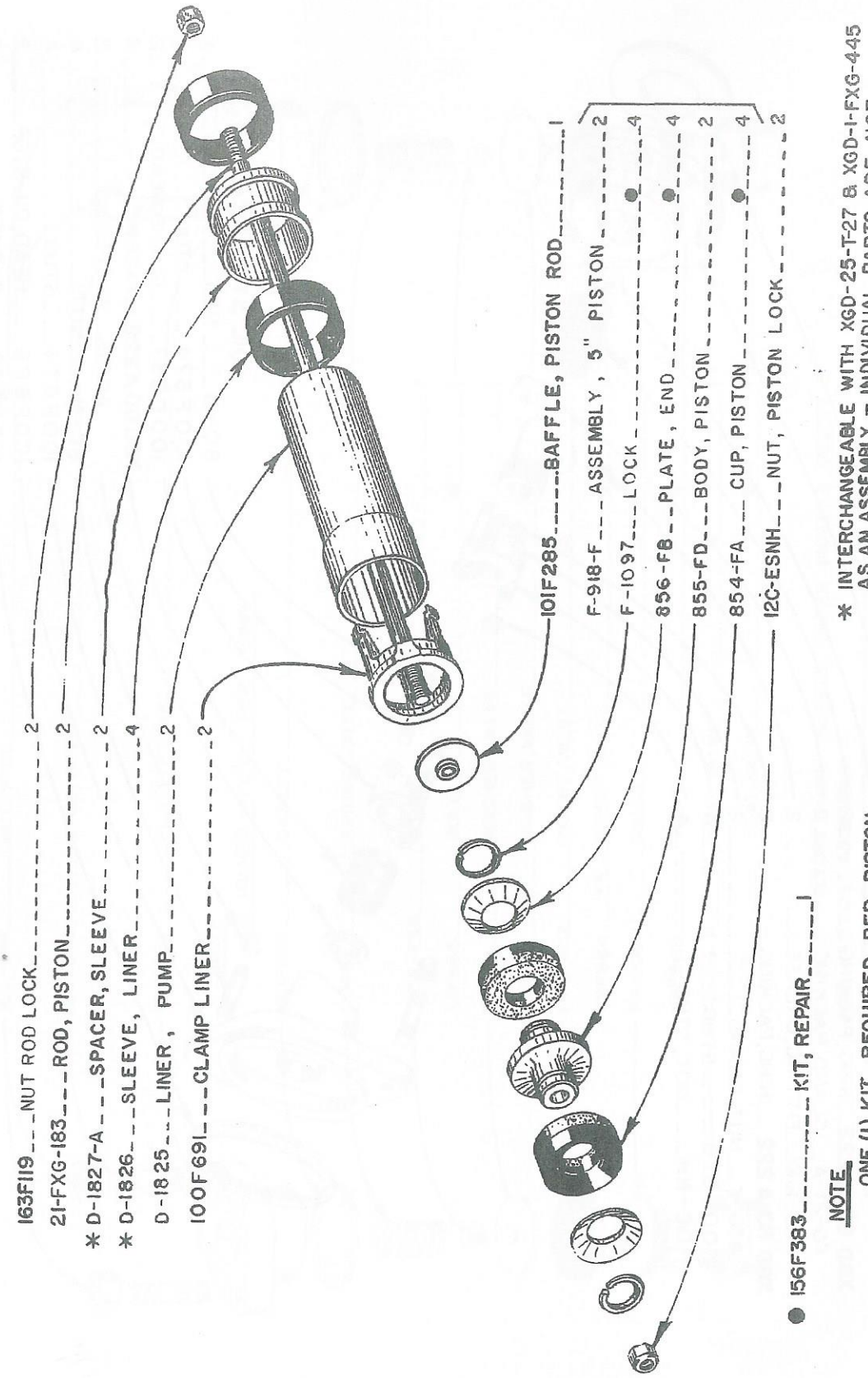

SECTION XVII

Pump Specifications and Parts Lists

Model FM-45

Mudmaster® 5" x 6-1/4" Slush Pump

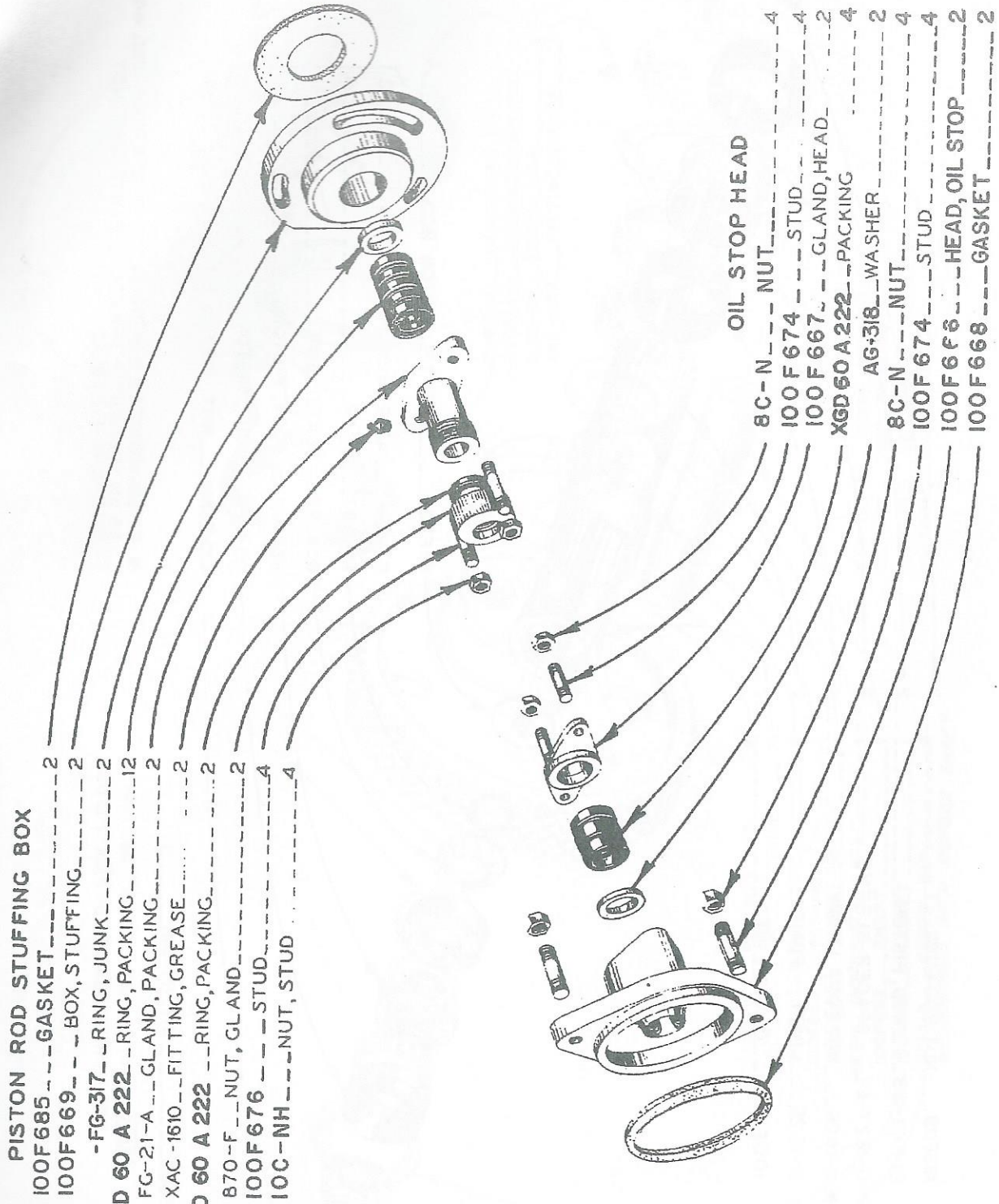

SECTION XVII

Pump Specifications and Parts Lists

Model FM-45

Mudmaster® 5" x 6-1/4" Slush Pump

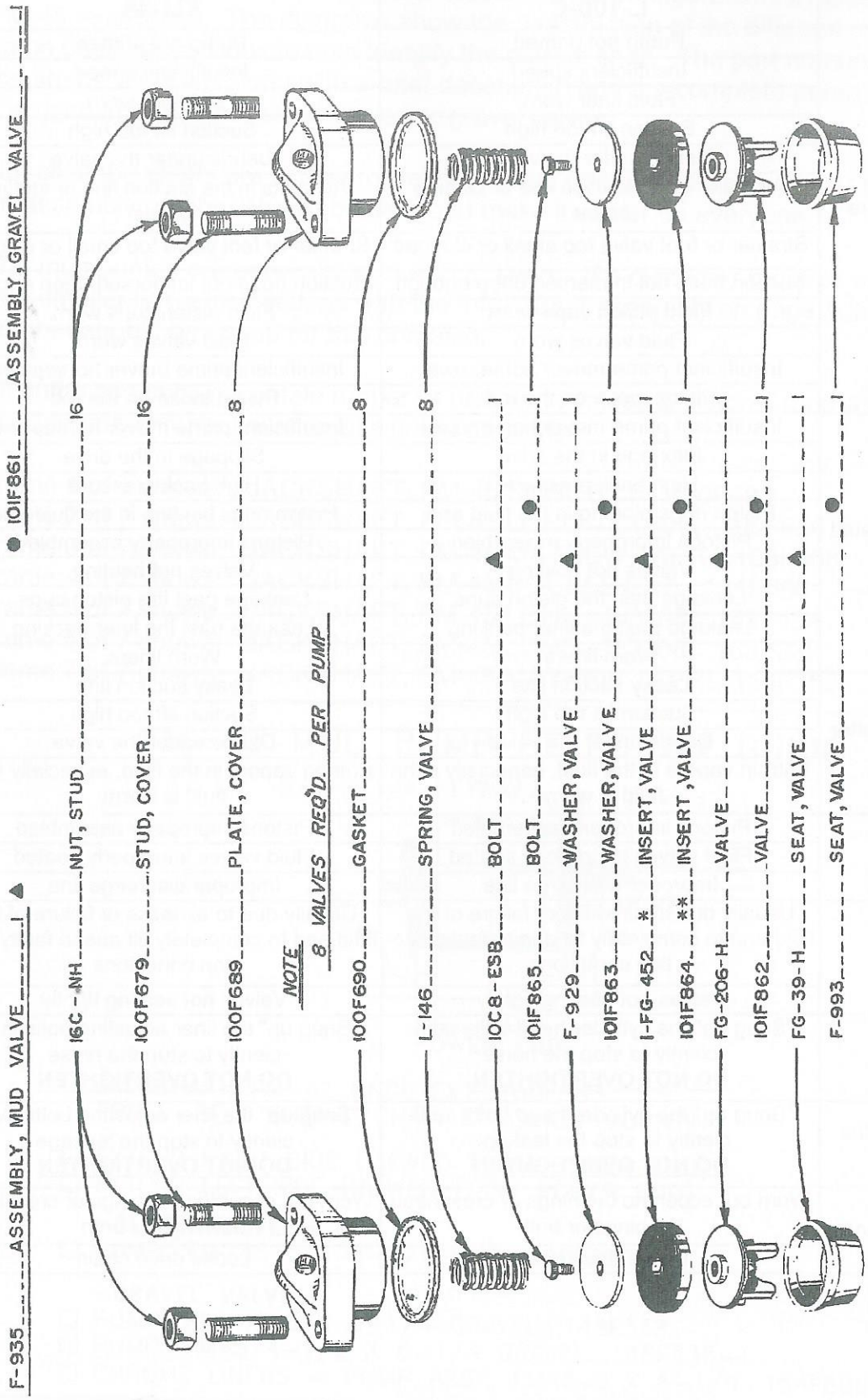

* FOR POLYURETHANE INSERTS, ORDER 140F838 INSERT ; OR 141F706 ASSEMBLY.

** FOR POLYURETHANE INSERTS, ORDER 140F839 INSERT OR 141F743 ASSEMBLY.

SECTION XVIII
Troubleshooting Guide

TROUBLESHOOTING GUIDE		
PROBLEM	**L-100-C**	**FM-45**
Failure to deliver the required volume:	Pump not primed	Pump not primed
	Insufficient speed	Insufficient speed
	Fluid liner worn	Fluid liner worn
	Suction lift too high	Suction lift too high
	Debris under the valve	Debris under the valve
	Air leaks in the suction line or stuffing boxes	Air leaks in the suction line or stuffing boxes
	Strainer or foot valve too small or clogged	Strainer or foot valve too small or clogged
	Suction hose not immersed deep enough	Suction hose not immersed deep enough
	Fluid piston cups worn	Fluid piston cups worn
	Fluid valves worn	Fluid valves worn
	Insufficient prime mover horsepower	Insufficient prime mover horsepower
	Piston loose on the rod	Piston loose on the rod
Failure to create the rated pressure	Insufficient prime mover horsepower	Insufficient prime mover horsepower
	Slippage in the drive	Slippage in the drive
	High back pressure	High back pressure
	Piston rings binding in the fluid end	Piston rings binding in the fluid end
	Pistons improperly assembled	Pistons improperly assembled
	Valves not holding	Valves not holding
	Leakage past the piston cups	Leakage past the piston cups
	Leakage past the liner packing	Leakage past the liner packing
	Worn liners	Worn liners
Pump loses capacity after starting	Leaky suction line	Leaky suction line
	Suction lift too high	Suction lift too high
	Debris under the valve	Debris under the valve
	Entrain vapors in the fluid, especially if the fluid is warm	Entrain vapors in the fluid, especially if the fluid is warm
Pump vibrates	Pistons improperly assembled	Pistons improperly assembled
	Fluid valves improperly seated	Fluid valves improperly seated
	Improper discharge line	Improper discharge line
Noisy fluid valves	Usually due to air leaks or failure of the fluid end to completely fill due to faulty suction conditions	Usually due to air leaks or failure of the fluid end to completely fill due to faulty suction conditions
	Valves not seating tightly	Valves not seating tightly
Noisy liners	"Snug up" the cylinder head bolts sufficiently to stop the noise **DO NOT OVERTIGHTEN**	"Snug up" the liner adjusting bolts sufficiently to stop the noise **DO NOT OVERTIGHTEN**
Water leaking out of the weep holes	"Snug up" the cylinder head bolts sufficiently to stop the leakage **DO NOT OVERTIGHTEN**	"Snug up" the liner adjusting bolts sufficiently to stop the leakage **DO NOT OVERTIGHTEN**
Noise in the power end	Worn out eccentric bushings or crosshead bushings or both	Worn out eccentric bushings or crosshead bushings or both
	Loose drive chain	Loose drive chain

SECTION XVIX
FM-45 Selection Guide

The following sheets show the seven different shaft configurations available for the FM-45 mud pump. The diagrams show the construction of the different shafts and some basic dimensions to help identify the correct shaft. The part number for each of the shafts is shown along with a brief description and the complete pump assembly[ies] it is used in with either slush valves or gravel valves.

Not all of the shafts are in assemblies. If a mud pump is sold with one of these shafts, an assembly number should be set up to make it easier on everyone.

The mud pumps are generally sold with 5" liners. If a customer requires one shipped with smaller liners installed, as with the 148F338-1 assembly on page 1, a new part number should be set up for this one also.

All pump assemblies contain rubber or neoprene valves & pistons, rods with GD-1 taper and non-chrome liners unless noted otherwise.

Frame 1 of 7 shows: JACKSHAFT, FM-45 SNGL EXT...100F683
Frame 2 of 7 shows: JACKSHAFT, FM-45 LONG – CL308...100F656
Frame 3 of 7 shows: JACKSHAFT, FM-45 MAYHEW TAPR...105F508
Frame 4 of 7 shows: JACKSHAFT, FM-45 DOUBLE EXT...141F666
Frame 5 of 7 shows: JACKSHAFT, FM-45 LONG –PO308...162F484
Frame 6 of 7 shows: JACKSHAFT, FM-45 LONG –PO308...165F035
Frame 7 of 7 shows: JACKSHAFT, FM-45 MAYHEW TAPR...154F362

FM–45 MUD PUMP SELECTION GUIDE

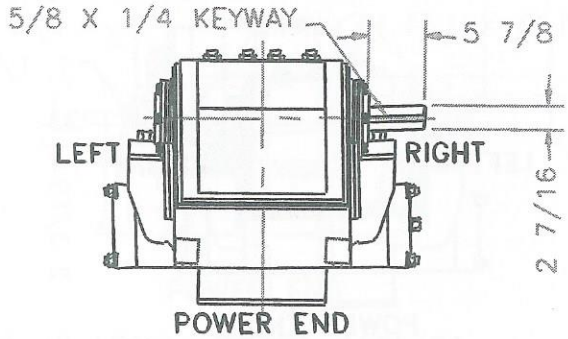

JACKSHAFT, FM–45 SNGL EXT...100F683
FOR V–BELT SHEAVE/CHAIN SPROCKET MOUNTING

- ☐ EXTEND RIGHT SIDE [VIEWED FROM POWER END]
- ☐ EXTEND LEFT SIDE [VIEWED FROM POWER END]

–SLUSH VALVES–

- ☐ PUMP, FM–45 5 X 6–1/4 MUD...100F700

–GRAVEL VALVES–

- ☐ PUMP, FM–45 5 X 6–1/4 GRAVEL...148F338
- ☐ PUMP, FM45 4–1/2 X 6–1/4 GRAVEL...148F338–1
- ☐ CHROME LINERS – PUMP ASSY, FM45 5 X 6–1/4...154F806

FRAME 1 of 7