Please see Manual Below

Click Here for NDS Home Page

26041 Newton Circle, Elko, MN 55020 • Phone (952) 461-3400 • Fax (952) 461-3403

NATIONAL OILWELL VARCO

Mission S & W Pumps

Installation, Operation and Maintenance Instructions

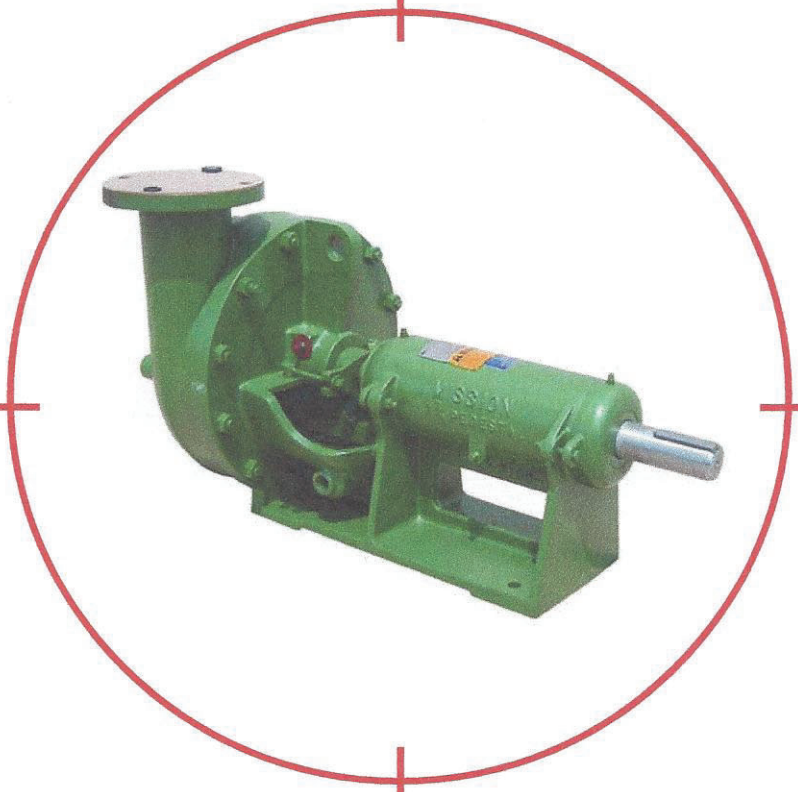

Bulletin No. M301-2

Distributor Contact:
NDS Drilling Supply, Inc
26041 Newton Circle
Elko New Market, MN 55020
1-800-637-1940 952-461-3400

P.O. Box 4638 Houston, Texas 77210-4638

REVISED: January 12, 2007
ISSUE: September 27, 2000

Foreword...

This manual contains instructions for the installation, operation and maintenance of the Mission S & W Pump. As pump service conditions and specifications vary considerably in pump installations, this manual cannot possibly cover every situation, but it is hoped that the information included will serve as a guide. Should questions arise, or start-up problems occur, it is suggested that you contact the Mission Pump Distributor or Salesman in your area.

There are many principles of proper pump installation and application as well as special considerations for the S & W design which, if followed, will further enhance the performance of your S & W pump.

This document will deal with both general and specific recommendations for improved S & W performance in both oilfield and industrial applications.

GENERAL INSTRUCTIONS

1. Operate the pump only in the performance range for which it was designed.
2. When operating in drilling mud, prevent packing drippage from clogging the drip pan and hardening around the slinger and front seal area.
3. Adjust the packing so that a small amount of leakage remains for lubrication and cooling.

⚠! CAUTION ! CAUTION ! CAUTION ! ⚠

EXERCISE SAFETY IN ALL PERFORMANCES: DO NOT IGNORE ANY WARNINGS; USE ONLY APPROVED METHODS, MATERIALS AND TOOLS. DO NOT PERMIT ANY FUNCTION OF QUESTIONABLE SAFETY; ACCIDENTS ARE CAUSED BY UNSAFE ACTS AND UNSAFE CONDITIONS. SAFETY IS YOUR BUSINESS AND YOU ARE INVOLVED.

⚠! WARNING ! WARNING ! WARNING ! ⚠

BEFORE PERFORMING ANY SERVICE FUNCTION, BE CERTAIN THAT THE UNIT IS SEPARATED FROM ITS POWER SOURCE OR THAT THE POWER SOURCE IS LOCKED-OUT TO PREVENT ANY FORM OF ENERGY FROM ENTERING THE EQUIPMENT. THIS WOULD INCLUDE ELECTRICAL OR MECHANICAL ENERGY INTO OR FROM THE PRIME MOVER(S), PNEUMATIC ENERGY FROM THE COMPRESSOR/AIR SYSTEM, ETC.

! WARNING ! WARNING ! WARNING !

FAILURE TO OBSERVE THE WARNINGS AND NOTES OF CAUTION IN THIS PUBLICATION CAN RESULT IN PROPERTY DAMAGE, SERIOUS BODILY INJURY, OR DEATH.

! ATTENTION - NOTICE - IMPORTANT !

THESE TERMS ARE USED TO DRAW ATTENTION TO ACTION THAT WILL CAUSE DAMAGE TO THE PUMP, COMPONENTS OR ATTACHMENTS.

! WARNING ! WARNING ! WARNING !

BEFORE SERVICING PUMPS:

1. SHUT DOWN OR DISENGAGE THE PUMP POWER SOURCE.
2. SHUT DOWN ALL PUMP ACCESSORY EQUIPMENT.
3. RELIEVE OR "BLEED OFF" ALL PRESSURE FROM THE LINES PRIOR TO REMOVING PIPING.

   FAILURE TO SHUT DOWN POWER AND RELIEVE PRESSURE FROM THE PUMP BEFORE SERVICING CAN RESULT IN SERIOUS PERSONAL INJURY AND PROPERTY DAMAGE.

Table of Contents...

INTRODUCTION

PAGE

I. GENERAL
A. Pump Assembly Mounting 6

INSTALLATION

I. GENERAL
A. Installation 6
B. Coupling Alignment 7
C. Piping 8

PREPARATION FOR OPERATION

I. GENERAL
A. Check Rotation 9
B. Start Up 9

LUBRICATION

I. GENERAL
A. Bearings 10
B. Pump Speed Limitations 10
C. Grease Lubrication 10
D. Oil Lubricated Pump 11

OPERATION

I. GENERAL
A. Priming 12
B. Pump Records 12
C. Loosen Packing on Start Up 12

TROUBLE SHOOTING PROCEDURES

I. GENERAL
A. Excessive Packing Leakage 13
B. Packing Burned 13
C. Trouble Shooting Guide 14

Table of Contents...

BEARING FAILURES

PAGE

I. GENERAL 15

II. IDENTIFICATION of BEARING FAILURE
A. Abnormal Temperature Rise 15
B. Grease Appearance 15
C. Noise 15
D. Bearing Discoloration 15
E. Retainer Failure 15

III. CAUSE
A. Dirty Lubrication 16
B. Too Much Lubrication 16
C. Wrong Kind of Lubrication 16
D. Misalignment Between Pump and Driver 16

REPACKING OF STUFFING BOX

I. GENERAL
A. Packing Appearance 17
B. Correct Installation of Packing 17
C. Adjusting the Packing 17
D. Lubrication and Cooling of Packing With Water 17
E. Grease Lubrication of Packing 17

INSTALLATION OF REPLACEABLE PARTS

I. GENERAL 18-19

CROSS SECTION DRAWING

I. GENERAL 15

PARTS LIST

I. GENERAL 16

Table of Contents…

LONG TERM PUMP AND MOTOR STORAGE

PAGE

I. GENERAL 20

ENGINEERING DATA

I. SUCTION PIPING 21-26

Introduction...

I. GENERAL

A. PUMP ASSEMBLY MOUNTING

The Mission Fluid King Oilfield Products Centrifugal Pump is shipped completely assembled and ready for operation. The impeller has been carefully lined up, and the shaft bearings have been locked in place to provide proper clearance within the housing. The shaft should be rotated by hand before installation to make sure the impeller clearance has not been disturbed during shipment. If the impeller scrapes, it must be reset. The pump may be mounted on a cast iron or steel plate and may or may not be connected to the driver. The base plate must be well supported on a solid foundation, leveled and firmly placed. External piping should be supported independently to align with suction and discharge flanges of the pump, so as to avoid transmitting pipe strains to the pump. Complete dimensions are given in the installation plan furnished with each pump.

Installation...

I. GENERAL

Operate the pump only in the performance range for which it was designed. When operating in drilling mud, prevent packing drippage from clogging the drip pan. The build-up can allow mud to go around the slinger and front seal into the bearings.

Adjust the packing so that a small amount of leakage remains for lubrication and cooling.

A. INSTALLATION

The pump should be located near the liquid source so that the suction line may be short and direct. The pump should be located below the level of the liquid to eliminate the necessity of priming.

Installation...

I. GENERAL (Continued)...

B. COUPLING ALIGNMENT

Good service life of the pump and driver depends upon good alignment through the flexible coupling. If the electric motor was mounted at the factory, the pump and motor were in alignment when shipped. ***The alignment between the driver and pump should be inspected after installation to ensure that transportation or other handling has not caused misalignment of the unit.*** Poor alignment may cause failure of the coupling, pump, or motor bearings, or of either shaft.

Alignment must not be attempted until the base is in position and the mounting and flange bolts have been tightened.

The recommended procedure for coupling adjustment is by the use of a dial indicator, as illustrated in Figures 1 and 2. The dial indicator is attached to one coupling, half with the indicator button resting on the O.D. of the other coupling, half to measure offset misalignment. To measure angular misalignment, the indicator is positioned so that the button rests on the face, near the O.D. of the other coupling half. Rotate the shaft and dial indicator one full revolution while the other shaft remains stationary and note the Total Indicator Reading (T.I.R). Unless otherwise specified by the coupling manufacturer, offset misalignment should be limited to 0.005 inches T.I.R. Adjust misalignment by loosening driver or pump mounting bolts and re-tightening or shimming as required.

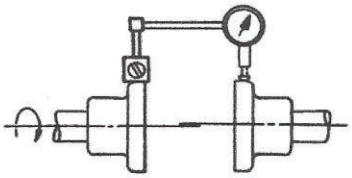

Figure 1 – Measuring Offset Alignment

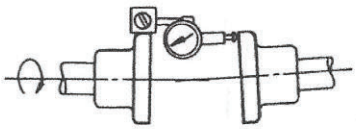

Figure 2 – Measuring Angular Alignment

In areas where a dial indicator arrangement is not available, an adequate job of alignment can be done with a straight edge. This method is especially useful if the coupling used contains an all rubber drive element.

To check offset misalignment, lay the straight edge in line with the shafts on the O.D.'s of the coupling halves. There should be no gaps under the straight edge. Check two locations 90° apart. Angular misalignment can be checked by measuring the gap between coupling half faces. There should be no more than 1/64" gap under the straight edge or 1/64" variation in the gap between coupling halves. See Figures 1A and 2A.

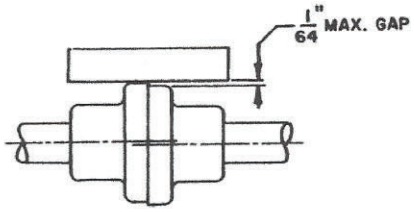

Figure 1A

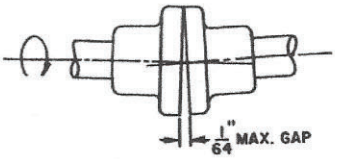

Figure 2A

NOTE: Further reference on coupling alignment can be found in Hydraulic Institute, 13th Edition, Pages 117 and 120.

Installation...

I. GENERAL (Continued)...

C. PIPING

1. General

NOTE: Piping must not be connected to the pump until the grout has hardened and foundation bolts and pump hold-down bolts have been tightened.

Piping should be anchored independently of the pump and as near to it as possible. Pipe companion flanges should line up naturally with pump flanges. ***Do not draw the pipe to the pump with flange bolts.***

2. Suction

Properly selected and installed suction piping is extremely important to eliminate vibration and cavitation in the pump. Vibration can cause packing problems, mechanical seal damage or undue bearing loads. The suction line should be equal to or larger than the pump suction.

The capacity of a centrifugal pump should never be adjusted by throttling the suction line. A positive shut-off valve of a type to cause minimum turbulence should be installed in the suction line to permit the closing of the line and removal of the pump for inspection and maintenance.

The suction line should be designed to eliminate any air pockets. The piping should gradually slope downwards to the source of supply to eliminate air pockets.

The suction line should have a straight section into the pump of a length equivalent to at least two (2) times its diameter; i.e., 4-inch suction; 8-inch straight run.

For temporary hook-up, where flexible hose is used, a non-collapsing hose is essential since the suction line pressure is often below atmospheric pressure. A collapsing suction line will result in below average or complete loss of flow. (See "Engineering Data" in this manual for illustrations.)

3. Discharge

A positive shut-off valve should be located in the discharge piping to permit inspection and maintenance of the pump.

All piping should be independently supported and accurately aligned. ***The pump must not support the weight of the pipe or compensate for misalignment.***

If operating conditions are not known with sufficient accuracy, it will be necessary to provide a throttle valve in the discharge line to ensure that the pump operates at the design point.

If the pump is connected to a pressurized system, it is important to install a check valve between the pump discharge and the throttling valve. The check valve will prevent back flow through the pump. Back flow may cause the impeller to become loose on the shaft. A loose impeller will likely result in mechanical damage and fluid leakage beneath the shaft sleeve.

Preparation for Operation...

I. GENERAL

A. CHECK ROTATION

Most pumps purchased are clockwise when viewed from coupling end. The correct rotation can be found by an arrow on the casing.

It is very important that the pump is not started up and then go and see if the pump is turning the correct rotation. The packing or mechanical seal can run dry and be destroyed.

The best way to check rotation is to disconnect the coupling before testing rotation, but it can be checked without disconnecting the coupling. One person should be at the pump watching the shaft, while the second person pushes the start button on the starter and immediately pushes the stop button so the shaft barely turns over.

B. START-UP

⚠! WARNING ! WARNING ! WARNING ! ⚠

IT IS ABSOLUTELY ESSENTIAL THAT THE ROTATION OF THE MOTOR BE CHECKED BEFORE CONNECTING THE SHAFT COUPLING. INCORRECT ROTATION OF THE PUMP FOR EVEN A SHORT TIME WILL DISLODGE THE IMPELLER AND DAMAGE THE IMPELLER, SHAFT OR BEARING HOUSING. THE PUMP SHAFT MUST TURN CLOCKWISE WHEN VIEWED FROM THE MOTOR END.

Check the following items before starting the pump:

1. Pump rotates freely by hand
2. Coupling aligned
3. Oiler full and oil level correct
4. Suction valve fully open
5. Pump and suction line full of fluid
6. Water to stuffing box or gland flush
7. Discharge valve slightly open

Lubrication...

I. GENERAL

A. BEARINGS

The pump is shipped with sufficient lubricant packing in the bearing to assure trouble-free operation for normal service life. Under normal operating conditions, no lubricant needs to be added to the bearings. If the pump is disassembled, it is advisable to pack the bearings with grease properly before re-assembly. Pack the bearing through approximately one-half of its circumference. It is not necessary to put grease in the bearing cap or pedestal.

The bearings normally may run at temperatures up to 180°F, without injury. A temperature of 180°F is hotter than the hand can stand to touch for more than a second or two, but will not burn off the paint. The temperature may be determined by sticking a thermometer to the bearing cap with heavy grease and leaving it for twenty (20) minutes.

Should the bearings run hot, immediate service is necessary. This abnormal condition indicates that (1) the bearings may not be properly installed, (2) pump and motor are out of alignment, (3) excessive grease has been forced into the bearing housing, (4) insufficient grease is present in the housing, or (5) improper grade or contaminated lubricant is present in the bearing housing. To correct this condition, first check motor and pump for misalignment. Check for proper amount of grease, and return the pump to service. In addition, a competent lubrication engineer should be consulted to recommend the proper lubricant for the particular operating condition

B. PUMP SPEED LIMITATIONS

PUMP SPEED LIMITATIONS		
TYPE	OIL	GREASE
S	3500	2400
W	3500	2400

C. GREASE LUBRICATION

Most pump bearings are pre-lubricated with grease from the factory, and in moderate speed, low temperature application may not need lubrication throughout the life of the pump. Plugs are installed where the grease fittings are to go. In heavy loads and hot applications, the bearings should be re-lubricated at regular intervals for maximum bearing life. The bearings are lubricated with Chevron SRJ-2 grease at the factory. When re-lubricating, the Chevron grease would be the best choice since mixing greases sometimes causes incompatibility problems. The other premium bearing greases are Exxon Unirex N2, Chevron Polyurea EP 2, Texaco Marfak Multi-Purpose 2, Shell Mp2, and American Oil Company's Rycon Premium 2 EP.

When using the five premium bearing greases listed above or their equivalent, five shots of grease with a standard sized hand operated grease gun, in each bearing every 2-3 MONTHS will be sufficient in a twenty-four hour operation. Reduce for lesser operation. The pump bearings should be lubricated about on the same schedule as the motor bearings.

Lubrication...

I. GENERAL (Continued)...

D. OIL LUBRICATED PUMP

If the pump is shipped with an oiler it should be operated on oil.

NOTE: Automatic Oilers are set at the factory to the lowest position. This setting will place the oil level just below the center of the bottom ball of the bearing when the housing is level. Higher levels may cause churning and overheating of the bearings; lower levels may provide insufficient lubrication and promote rapid wear. ***The correct oil level will be visible at the center of the sight oil gauge.***

Standard pumps are shipped with empty oil reservoirs. ***Oil must be added before operating the pump.*** Attach the oiler to the bearing housing, fill the bottle with oil and place it in position. Refill the bottle until oil remains visible in the bottle. Oil should not be added to the reservoir except through the oiler bottle.

A good grade of SAE 10W 30 oil may be used. The air vent should be kept clean to prevent pressure build-up because of normal heating that occurs in operation. A Trico Optomatic Oiler No. EB-64 with a 4 ounce capacity bottle is used. ***The correct bottle must be used with the corresponding oiler body.***

Operation...

I. GENERAL

Space is provided for three rings of 3/8" square packing at the impeller side of the lantern ring. Packing should be of a grade suited to the operating conditions of the pump; square braided packing is regularly furnished. Excessive tightening of the packing gland nuts causes shaft wear, is unnecessary, and should be avoided. Slight leakage, approximately 10-12 drops each minute, is desirable to act as a packing lubricant. If a corrosive or abrasive material is pumped, gland water at a maximum pressure of 15 PSI should be piped to the lantern ring by way of the 1/4" pipe connection and allowed to leak through the packing for lubrication. The drip pan under the shaft is provided with two 1/2" pipe connections to drain off this leakage. A grease fitting may be put in the 1/4" tapped lantern ring connection if grease lubrication of the packing is desired. Water pump grease is usually satisfactory.

A. PRIMING

Be sure the pump has fluid in its casing before running. If the pump is operated without fluid, the mechanical seal or packing can be destroyed in one minute. Vent air from suction line and fill with liquid. Start pump with discharge valve cracked open. After discharge pressure stabilizes, gradually open discharge valve to required position. If flow is lost, close discharge valve and wait a few seconds for discharge pressure to build.

Do not run pump with suction valves closed **ANYTIME** and with discharge valves closed for only short periods of time. The energy going into the pump heats the fluid in the casing. If the pump needs to operate shut in some of the time, be sure to have a small line (1/4" or 1/2") back to the suction tank between the discharge valve and pump for cooling.

B. PUMP RECORDS

Maintain data cards or pump records whenever possible. ***This will provide ready access to information for ordering spare parts and for evaluating pump and mechanical seal performance.***

Information to be included in these records should be:

1. Pump size and serial number.
2. Pump model number, impeller diameter, material of construction.
3. Mechanical seal manufacturer, type, code and drawing number.
4. Motor horsepower and speed of operation.
5. Service conditions.
6. Frequency of operation.
7. Record of maintenance, including parts usage and general condition of the pump.
8. Nomenclature and part number of replacement items.

C. LOOSEN PACKING ON START UP

The gland bolt nut should be only finger tight. New packing will expand faster with heat than older packing. Therefore, new packing must be adjusted more slowly than old packing: Too tight and it will not leak. With no cooling it will burn and be no good for sealing.

Trouble Shooting Procedures...

I. GENERAL

NOTE: See also Trouble Shooting Guide.

A. EXCESSIVE PACKING LEAKAGE

Where excessive packing leakage and rapid packing failure occurs, the shaft or shaft sleeve may be worn out. Remove the packing. Slide a wire, with a short section of the tip bent 90°, into the stuffing box. Run the "stylus" tip of the wire along the shaft. If deep grooves are noted, the shaft or sleeve must be replaced. Excessive tightening of the packing will cause rapid sleeve failure.

B. PACKING BURNED

If the packing is burned and hard when removed, it has been over-tightened at some time and the lack of leakage caused the packing to burn. Once packing has burned and is no longer and soft and pliable, it will not seal properly. Initial over-tightening and attempting to run packing without leakage will cause the packing to burn.

Trouble Shooting Procedures...

I. GENERAL

D. TROUBLE SHOOTING GUIDE

Causes	Noise/ Vibration	No Flow	Insufficient Flow	Insufficient Pressure	Excessive Power Required	Intermittent Flow	Short Bearing Life
Pump not primed		X	X				
Speed too low			X	X			
Excessive discharge head		X	X				
Insufficient NPSH available	X	X	X			X	
Impeller clogged		X	X			X	
Wrong direction of rotation			X	X			
Plugged suction or discharge line	X	X	X				
Foot valve or suction line not immersed deeply enough		X	X			X	
Impeller damaged		X	X	X			
Shaft packing or seal defective			X	X			
Impeller diameter too small			X	X			
Impeller diameter too large					X		
Excessive amount of air or gas in liquid				X		X	X
Speed too high					X		X
Total head lower than design					X		
Specific gravity or viscosity too high			X		X		X
Bent shaft	X				X		X
Improper electric motor wiring or voltage					X		
Rotating elements bind	X				X		X
Leaky suction line or shaft seal		X	X			X	
Misalignment	X				X		X
Bearings worn	X						X
Impeller out of balance	X						X
Suction or discharge piping not anchored	X						
Improper foundation	X						
Insufficient discharge head (excessive flow)	X			X	X	X	X
Improper lubricant or level							X
Impeller clearance too large			X	X	X		

Bearing Failures...

I. GENERAL

EXCEPT FOR CAVITATION PROBLEMS, BEARING FAILURE IS THE GREATEST CAUSE OF INCREASED PUMP OPERATING COST. IF YOU CONTINUE TO RUN A PUMP WHEN BEARING FAILURES OCCUR, THERE IS AN EXCELLENT CHANCE THE WHOLE PUMP MAY BE DESTROYED. Therefore it is very important to change the bearings when failure STARTS. If you wait for complete failure, other fluid end parts will be damaged.

Bearing failure is more often caused by LUBRICATION FAILURE than by normal bearing wear.

II. IDENTIFICATION OF BEARING FAILURE

A. ABNORMAL TEMPERATURE RISE

The first indication of lubricant and bearing failure is a rapid rise from normal operating temperature. You can not hold your hand very long on unsatisfactory temperatures. If you can hold your hand on the bearing housing about 5 seconds, the temperature is about 160°F. (suitable for most pumps). IF YOU CAN NOT HOLD YOUR HAND ON THE BEARING HOUSING FOR 5 SECONDS OR IF THE BEARING HOUSING IS SO HOT YOU DO NOT WANT TO PUT YOUR HAND ON IT YOU PROBABLY HAVE LUBRICANT AND BEARING FAILURE.

B. GREASE APPEARANCE

If the grease is stiff or caked and changed in color, it indicates lubrication failure. The original color will usually turn a dark shade or jet black.

The grease will have an odor of burnt petroleum oil. Lubrication will be lost as a result of lack of oil IN CASES OF LITHIUM BASE GREASES THE RESIDUE APPEARS LIKE A GLOSSY BRITTLE VARNISH, WHICH WILL SHATTER WHEN PROBED WITH A SHARP INSTRUMENT.

Grease is a mixture of oil and usually soap. When a pump or other equipment sits a long time without rotating the oil separates and runs out of the bearing housing. It may look like grease is still in the bearing, but it will not have any lubrication properties.

C. NOISE

Lack of lubrication is soon accompanied by a whistling noise, coupled with the rise in temperature. If not corrected, the bearing temperature will continue to rise and the intense heating will reduce the bearing hardness.

D. BEARING DISCOLORATION

A brownish or bluish discoloration of the races and balls indicates that the bearing operating temperature was excessively high, to the extent that the bearing lost its physical properties and was no longer operable.

E. RETAINER FAILURE

The bearing part that first indicates distress in lubrication failures is usually the retainer, where the greatest amount of rubbing action takes place.

Bearing Failures (Continued)...

III. CAUSE

A. DIRTY LUBRICATION

Contaminants found in lubricants often act as an abrasive compound which will lap or polish ball and race surfaces, increasing the probability of early failure. Always be sure you use good clean lubricant from a tube and NOT from an open bucket.

B. TOO MUCH LUBRICANT

A very common error in the maintenance of machinery is the tendency to over-lubricate. If the bearing reservoir is kept constantly full of grease, the friction heat developed within the lubricant can not get out and will cause its rapid deterioration.

C. WRONG KIND OF LUBRICANT

After experimentation with many types of lubricants, the equipment manufacturer recommends those which he feels will provide ideal lubrication life under given operating conditions. In as far as availability allows you should use the same lubricant or its equivalent. MANY GREASES ARE INCOMPATIBLE AND, ALTHOUGH COMPLETELY ADEQUATE WHEN USED INDIVIDUALLY, MAY PROVE UNSATISFACTORY WHEN MIXED.

D. MISALIGNMENT BETWEEN PUMP AND DRIVER

A MAJOR CAUSE OF BEARING FAILURE IS MISALIGNMENT. ALIGNMENT BETWEEN THE PUMP AND MOTOR SHOULD ALWAYS BE CHECKED AFTER SHIPMENT AND PERIODICALLY RECHECKED.

Repacking of Stuffing Box...

I. GENERAL

MOST EARLY PACKING FAILURES ARE CAUSED BY OVERTIGHTENING OR POOR INSTALLATION.

A. PACKING APPEARANCE

If the packing being removed is hard and brittle, it has been run dry sometime during its life. This is often done in the first hour of service. The packing has more ability to grow with heat during its early life. Even if the packing is adjusted just right before starting the pump, in the first few minutes the packing will grow with heat and become over-tight. It then will run drop tight and burn the packing. ONCE PACKING IS BURNED IT WILL NEVER SEAL RIGHT AGAIN. On new packing let it leak more in the first few hours, then adjust it to 10-12 drops per minute.

B. CORRECT INSTALLATION of PACKING

Make sure the box is clean of all old packing and the plastic lantern ring. Bend a wire and pull it down the shaft or shaft sleeve to be sure it is smooth for good packing life.

Place the first three rings of packing in the front of the box with the splits alternated. The first split to be down, the second split up, and the third split down. Then insert the lantern ring and compress this assembly forward with the gland halves. Then install the last two rings split up then split down. The object is to have the last split down so leakage will drip down, not run along the shaft and maybe into the bearings.

After the packing has been installed, install the packing gland and tighten hard to compress the packing assembly. Back off the gland bolts and retighten only finger tight.

C. ADJUSTING the PACKING

Packing must have cooling, therefore it must leak. When adjusting the packing always adjust only one flat on the nut at a time, waiting for the packing to heat before adjusting tighter. THE PACKING MUST LEAK 10-12 DROPS PER MINUTE TO REMAIN COOL.

D. LUBRICATION and COOLING of PACKING WITH WATER

It is best to inject water into the lantern ring from an external source on drilling mud. This will keep most of the solids out of the packing.

E. GREASE LUBRICATION of PACKING

If water can not be used, the next best addition to the packing would be grease from an automatic spring loaded grease cup. This will help keep the packing sot. There is a visual indication when the cup no longer has any grease. The stored grease normally lasts a week or more if the packing is adjusted correctly.

Installation of Replaceable Parts...

I. GENERAL

The fluid end is so constructed that those parts subject to wear may be readily replaced in the field. To replace the casing, wear plate, and impeller, the following procedure should be followed:

1. Stop pump and drain all lines leading to the pump.
2. Loosen the bolts at the suction and discharge flanges of the pump and move pipe clear of pump casing and remove pump from system.
3. Separate the coupling, and loosen the coupling half mounted on the pump shaft.
4. Remove the casing stud nuts, and take off the casing.
5. Loosen the packing gland nuts, and swing the packing gland bolts clear of the packing gland. Remove the packing gland halves.
6. Slide the water slinger along the shaft away from the bearing cap.
7. Loosen bearing cap bolts on both ends and slide the bearing caps along the shaft. This will expose the bearings, which are locked to the shaft by an eccentric locking ring and set screw.
8. Loosen the bearing set screw and tap the bearing locking ring with a punch and a small hammer so that it turns in the direction opposite to the rotation of the shaft. When the bearing locking ring has been turned 1/4 revolution, the bearing is freed from the shaft. Both bearings must be released. File off any upset caused by the collar set screw before attempting to slide shaft through bearings.
9. Remove the impeller and shaft from the pedestal by pulling the impeller away from the pedestal, thus freeing the lantern ring, water slinger, bearing caps, bearings, and the couplings.
10. Remove the impeller nuts and washer.
11. Remove lantern ring and packing.
12. Remove wear plate by applying pressure on the hub of the wear plate through the shaft hole. The wear plate is pressed into the pedestal and forms the bottom of the stuffing box.
13. The bearings may now be removed from the pedestal for inspection, by tapping lightly with a wooden or brass rod.
14. For 6X8 pump, press impeller off the shaft.

Installation of Replaceable Parts...

I. GENERAL (Continued)...

To re-assemble the pump, the above procedure is reversed.

New gaskets should be used throughout. Gaskets should be 1/16" thick and made of a material suitable to the pump operating condition.

In establishing proper clearances on the impeller, the following precautions are necessary.

1. With impeller installed on shaft and rigidly keyed in place, insert the shaft through the shaft hole in the wear plate. The water slinger, bearings caps, gaskets, bearings, and coupling must be threaded on the shaft in the proper order.

2. Put on the casing with the casing gasket and tighten the casing stud nuts uniformly.

3. Push the shaft forward until the impeller hits the casing, mark the shaft, then pull it back until the impeller hits the wear plate and mark the shaft again.

4. The shaft should be set halfway between these two marks, so that the clearance between the impeller and the casing is approximately the same as that between the impeller and the wear plate.

5. Make sure the rear bearing is seated against the housing shoulder, and then lock it to the shaft rotating the bearing locking ring in the direction of pump rotation, and locking it with the set screw.

Note:

6. The front bearing does not seat against the housing shoulder. This bearing should be free to float along with the shaft to compensate for expansion and contraction caused by temperature changes. The outer race clearance is about 1/16" on each side. This clearance is obtained by pushing the bearing in until it seats against the shoulder, and then pulling it out 1/16".

7. The front bearing is then locked to the shaft in the same way as the rear bearing.

Cross Sectional Drawing...

I. GENERAL

See parts list for part descriptions.

1780 Type "W"

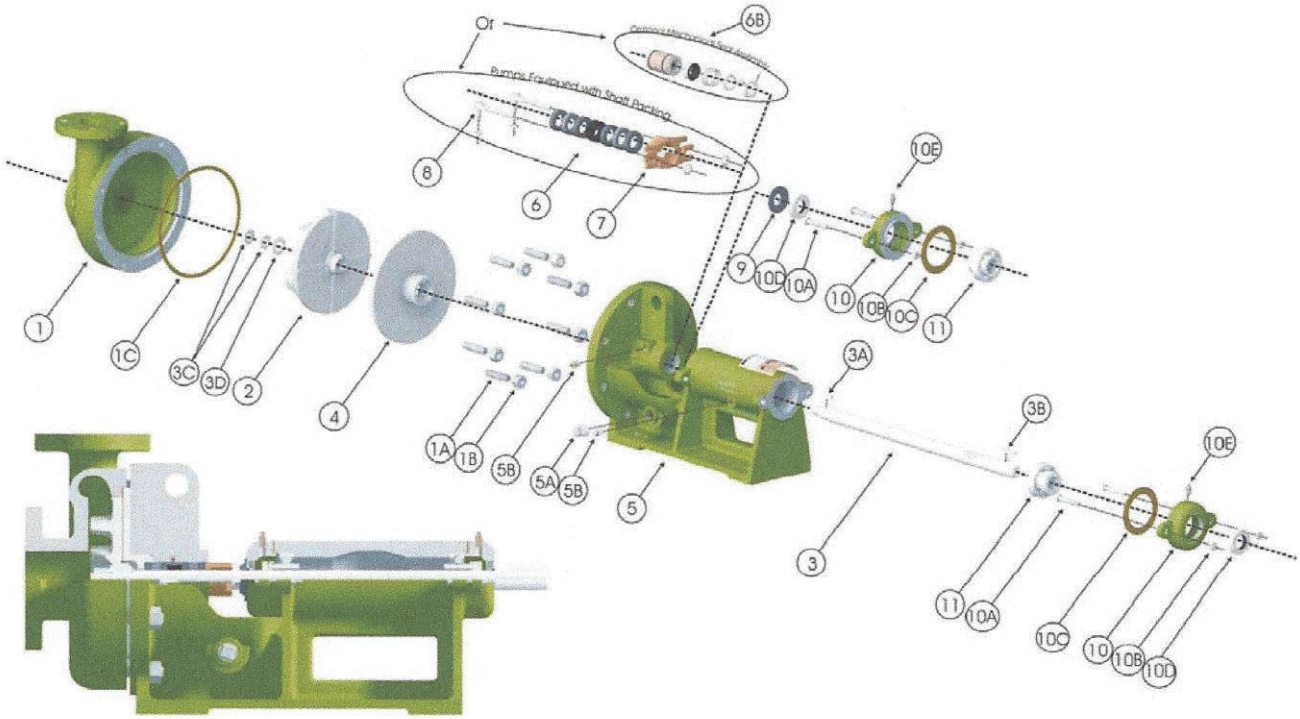

Figure 1

Parts List...

I. GENERAL

"S" Type 118 Centrifugal Pump

Item No.	Qty	Part No.	Catalog No.	Description
1	1			Casing (see sheet 1)
1A	8	601408479	11907-82	Stud
1B	8	601408552	3932-1	Nut
1C	1	601477912	10399-19-1	Gasket, Casing
2	1			Impeller (see sheet 1)
3	1	601118359	X3769-21A	Shaft, Chrome Plated (std)
3	1	601118300	3769-21A	Shaft, 416SS (optional)
3	1	601104078	3769-4A	Shaft, 316SS (optional)
3	1	601190143	17361-21G7A	Shaft, ceramic coated (opt)
3A	1	601212186	4372-1-21	Key, Imp. end 416SS (std)
3A	1	601211832	4372-1-4	Key, Imp. end 316SS (opt)
3B	1	601212251	4372-2-21	Key, Cplg. End
3C	2	601429814	6209-7-25	Nut, Impeller 304SS (std)
3C	2	601429848	6209-7-4	Nut, Impeller 316SS (opt)
3D	1	601408842	3936-2-4	Washer, Imp.
4	1			Wear Plate (see sheet 1)
5	1	601203995	E3768	Pedestal
5A	1	601471964	8262-6	Plug, Drain
5B	1	601499403	19368-01	Hydraulic grease fitting
6	1	661007002	25014-01S-B	Packing, Graphite (std)
6	1	601174279	8475-11S-1A	Packing, Chevron (opt)
6	1	661007010	25015-01S-BA	Packing, King (opt)
6	1	661007004	25014-01S-D	Packing, Teflon (opt)
6A	1	601446859	6480A	Lantern Rings
7	1	601373004	8204-13A	Packing Gland
8	2	601102494	B3701A	Gland Bolt Assy.
9	1	601404692	C3770A	Water Slinger Assy.
10	2	601196504	3773A	Bearing Cap
10A	4	601407505	3861-1	Bolt
10B	4	601408560	3932-2	Nut
10C	2	601478050	10399-21-1	Gasket, bearing cap
10D	2	601408891	3943-12	Grease Seal
11	2	601410152	3944-01	Bearing
6B Option	1	603450602	22211-1	Mechanical Seal
6B Option	1	662010083		Mechanical Seal
Option	1	601174584		Oiler Assembly
Option	1	603453408		Spring loaded grease cup

Pump Size	Material	Item 1 Casing	Item 4 Wear Plate	Item 2 Impeller*
1 x 1-1/2 C	Cast Iron	601103518	601302524	4170-XX-01
1 x 1-1/2 C	Alum Bronze	662003001	601203151	4170-XX-13
1-1/2 x 2 R	Cast Iron	601112618	601302524	4571-XX-01
1-1/2 x 2 R	316 SS	601112758	601202807	4571-XX-04
1-1/2 x 2 R	Alum Bronze	601112964	601203151	4571-XX-13
1-1/2 x 2 C	Cast Iron	601111420	601302524	4170-XX-01
2 x 3 R11	Cast Iron	601113947	601302524	4574-XX-01
2 x 3 R11	Alum Bronze	601114291	601203151	4574-XX-13
2 x 3 C11	Cast Iron	601111073	601302524	4173-XX-01
3 x 4 R11	Cast Iron	601117237	601302524	5170-XX-01
3 x 4 R11	Alum Bronze	601117443	601203151	5170-XX-13
3 x 4 R11	316 SS	601117302	601202807	5170-XX-04

*Impeller size indicated as XX for simplicity.

"W" Type 178 Centrifugal Pump

Item No.	Qty.	Part No.	Catalog No.	Description
1	1			Casing (see sheet 1)
1A	12	601408305	11907-83	Stud, Casing
1B	12	601408552	3932-1	Nut, Casing
1C	1	601477987	10399-20-1	Gasket, Casing
2	1			Impeller (see sheet 1)
3	1	601118458	X4932-21A	Shaft, Chrome Plated (std) 2x3-4x5
3	1	601118409	4932-21A	Shaft, 416SS (opt) 2x3-5x6
3	1	601106511	3786-4A	Shaft, 316SS (opt) 2x3-5x6
3	1	601120106	17238-21G7A	Shaft, Ceramic coated (std) 5x6
3	1	601120207	17343-21G7A	Shaft, Ceramic coated (std) Press fit 6x8 only
3	1	601174808	X14928-21A	Shaft, Chrome plated (opt) Press fit 6x8 only
3	1	601190135	14928-21A	Shaft, 416SS (opt) Press fit 6x8 only
3	1	601174790	14928-4A	Shaft, 316SS (opt) Press fit 6x8 only
3	1	601195001	24927-21G7A	Shaft, Ceramic coated (opt) Slip fit 6x8 only
3A	1	601212327	4372-3-21	Key, Imp. End Slip Fit 416SS
3A	1	601211907	4372-3-4	Key, Imp. End Slip Fit 316SS
3A	1	601212350	4372-22-21	Key, Imp. End Press Fit 416SS (6x8)
3A	1	601212285	4372-22-4	Key, Imp. End Press Fit 316SS (6x8)
3B	1	601212392	4372-5-21	Key, Cplg. End
3C	2	601429905	6209-8-25	Nut, Impeller 304SS
3C	2	601429871	6209-8-4	Nut, Impeller 316SS
3D	1	601408834	3936-16-4	Washer, Imp.
4	1			Wear Plate (see sheet 1)
5	1	601206873	L3785	Pedestal
5A	1	601471964	8262-6	Plug Drain
5B	1	601499403	19368-01	Hydraulic Grease Fitting
6	1	661007003	25014-02W-B	Packing, Graphite Acrylic (std)
6	1	601174550	8475-17W-1A	Packing, Chevron (opt)
6	1	661007009	25015-02W-BA	Packing, King (opt)
6	1	661007001	25014-02W-D	Packing, Teflon (opt)
6A	1	601447162	6480-2A	Lantern Rings
7	1	601367204	7406-13A	Packing Gland
8	2	601102494	B3701A	Gland Bolt Assy.
9	1	601499882	22707A	Water Slinger Assy.
10	2	601196702	3790A	Bearing Cap
10A	4	601407505	3861-1	Bolt
10B	4	601408560	3932-2	Nut
10C	2	601478191	10399-23-1	Gasket, bearing cap
10D	2	601409030	3943-14	Grease Seal
11	2	601410293	3944-03	Bearing
6B Option	1	662010082		Mechanical Seal
Option	1	601174584		Oiler Assembly
Option	1	603453408		Spring Loaded Grease Cup

Pump Size	Material	Item 1 Casing	Item 2 Impeller	Item 4 Wear Plate
2x3-R	Hard Iron	601115207	4610-XX-30	601205677
2x3-R	Alum Bronze	601114994	4610-XX-13	601205537
2x3-R	316SS	662004002	4610-XX-04	601205115
2x3-C	Hard Iron	601105893	3781-XX-30	601205677
3x4-R	Hard Iron	601113871	4605-XX-30	601205677
3x4-R	Alum Bronze	601113665	4605-XX-13	601205537
3x4-R	316SS	601113459	4605-XX-04	601205115
3x4-C	Hard Iron	601101348	3689-XX-30	601205677
4x5-R	Hard Iron	601115975	4705-XX-30	601205677
4x5-R	Alum Bronze	N/A	4705-XX-13	601205537
4x5-C	Hard Iron	601107436	3798-XX-30	601205677
5x6-R	Hard Iron	601116536	4710-XX-30	601205677
5x6-R	Alum Bronze	N/A	4710-XX-13	601205537
5x6-R	316SS	601116130	4710-XX-04	601205115
5x6-C	Hard Iron	601111008	3903-XX-30	601205677
6x8-R	Hard Iron	601117161	5142-XX-30	601205677
6x8-R	316SS	601117054	5142-XX-04	601205115

Long Term Pump and Motor Storage...

I. GENERAL

1. Pump packages should be stored indoors in a clean, dry and protected environment.
2. The storage area is to be free from any vibration and from extremes in temperature.
3. Motor and pump shafts are to be rotated manually every two months. A record of the rotation should be made.
4. Grease in the motor and pump bearings is to be purged at the time of removal from storage, making sure that an ample supply of fresh grease is in each grease cavity.
5. Motor winding should be megged at the time equipment is put in storage. At the time of removal from storage, the resistance reading must not have dropped more than 50% from the initial reading. Any drop below this point necessitates electrical or mechanical drying of the motor windings. Condensation from hot days and cool nights can fill the motor half full of water. This is a greater potential problem in damp areas.
6. If the pumps are to be stored outside, the pump suction and discharge openings should be sealed to prevent any water from entering the pump housing, causing rust of the fluid end during storage.

Engineering Data...

I. SUCTION PIPING

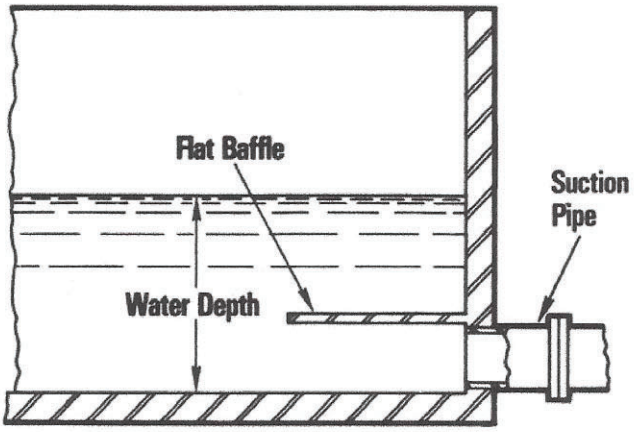

Side View

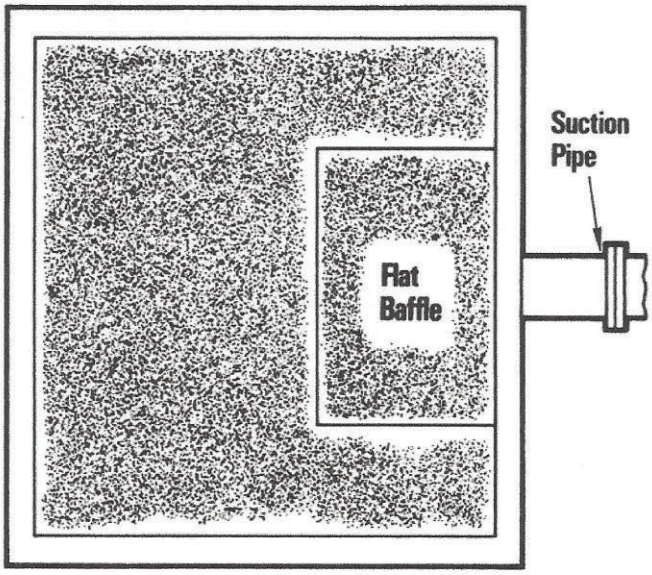

Top View

Vortex can be prevented by proper baffle arrangements.

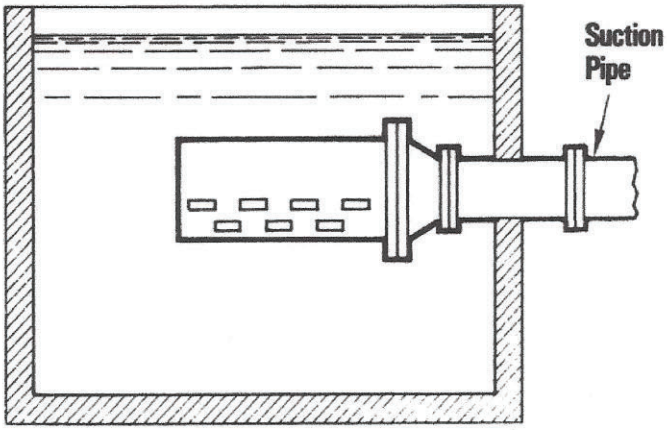

Engineering Data...

I. SUCTION PIPING (Continued)...

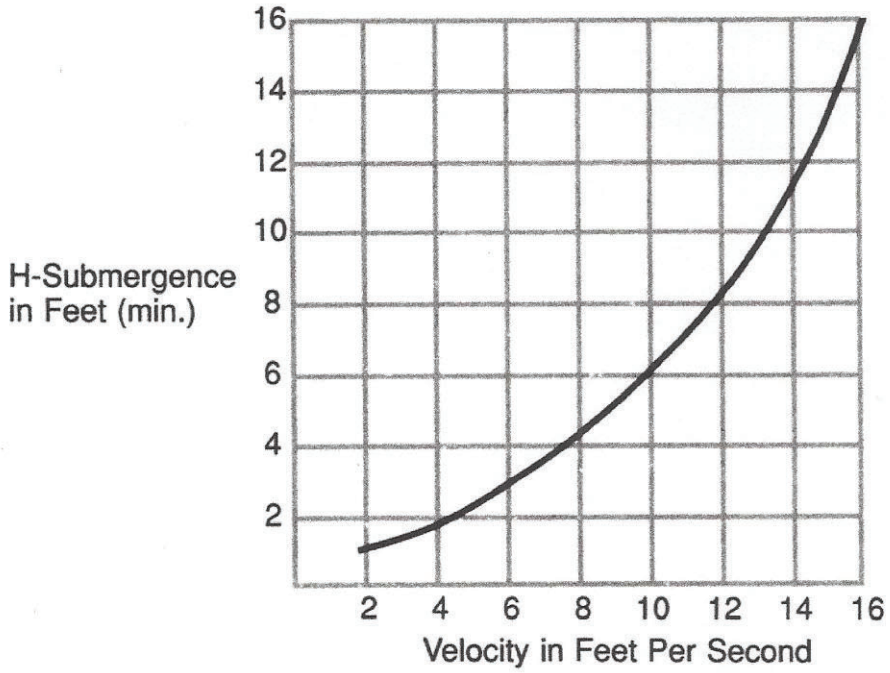

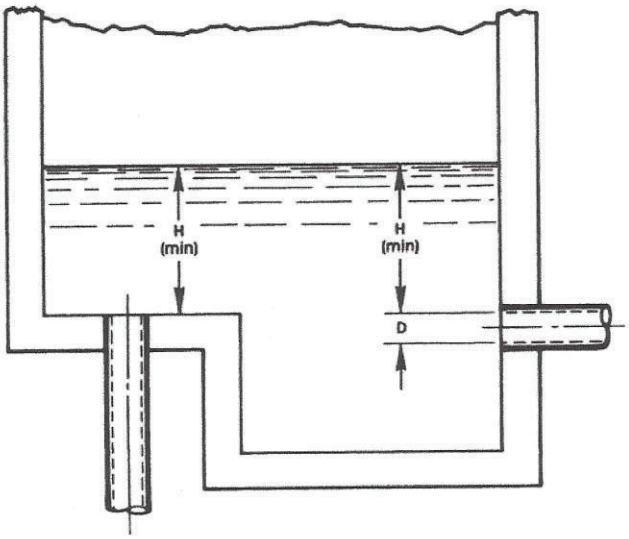

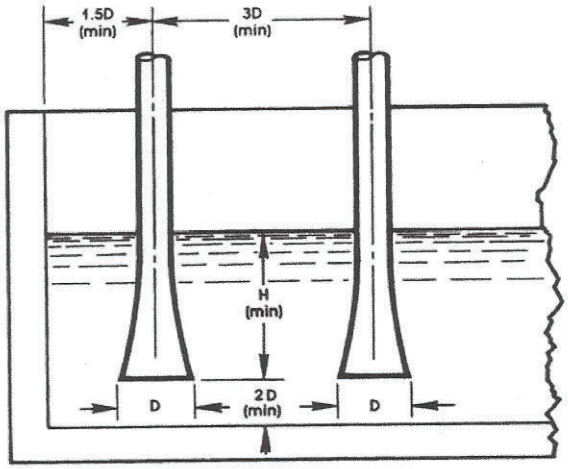

This can be used as a guide for minimum submergence and piping design.

$$\text{Velocity, feet per second} = \frac{\text{GPM} \times .4}{D^2 \text{ (inches)}}$$

Engineering Data...

I. SUCTION PIPING (Continued)...

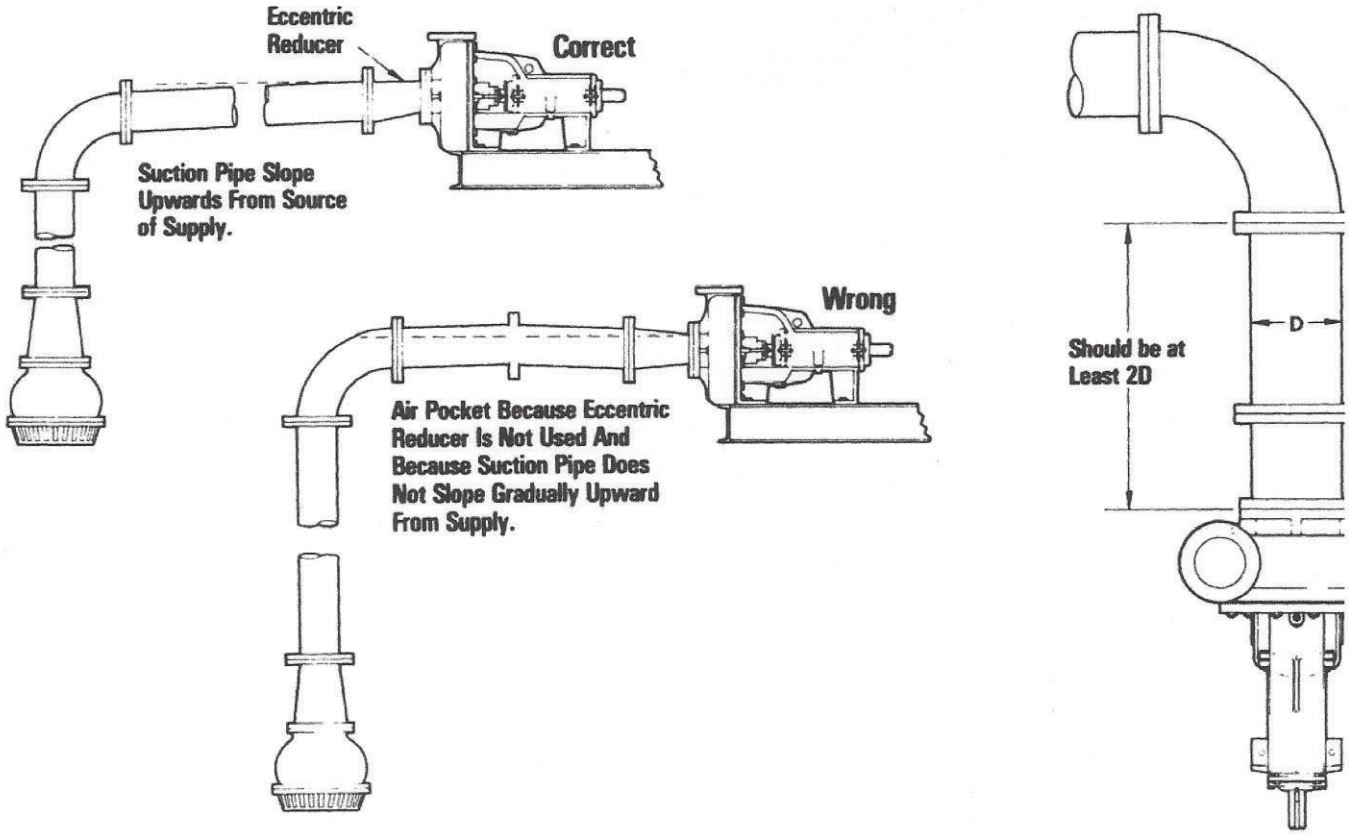

Engineering Data...

I. SUCTION PIPING (Continued)...

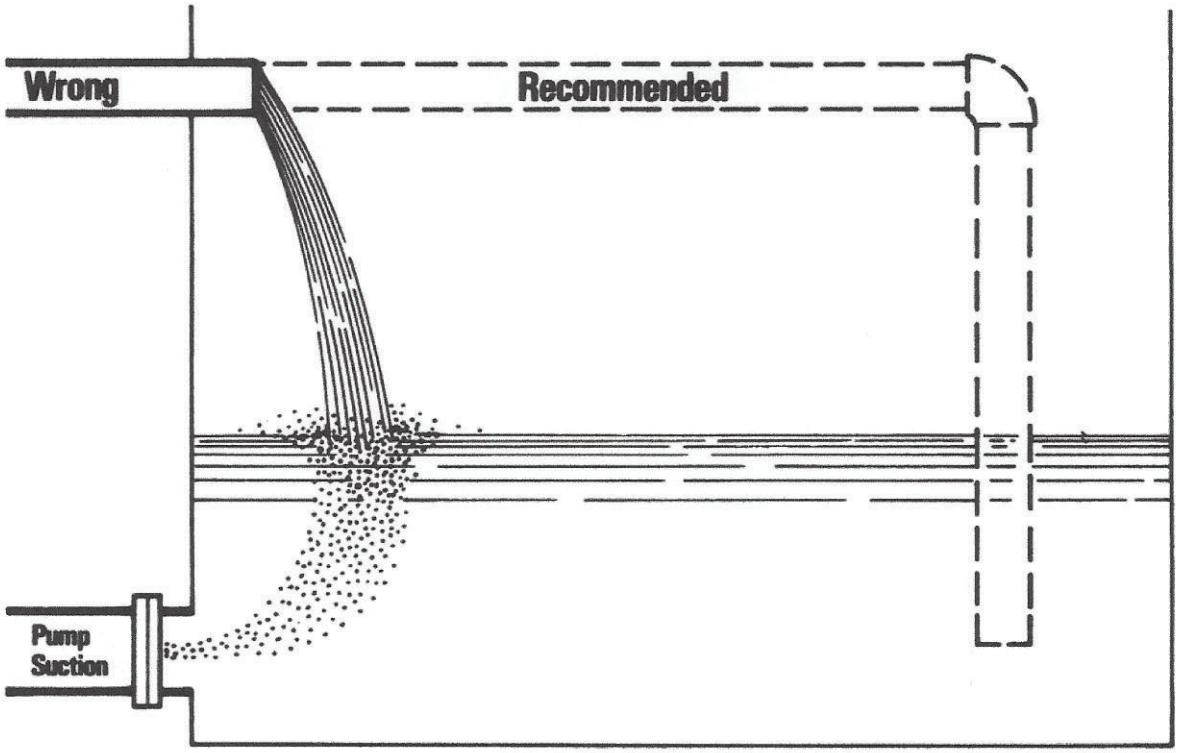

Engineering Data...

I. SUCTION PIPING (Continued)...

Engineering Data

Conversion Data

GPM = .03 x Barrels per day

Specific gravity = $\frac{\text{weight fluid in pounds/gal.}}{8.34}$

SP. GR. = $\frac{\text{pounds/cu. ft.}}{62.4}$

Feet Head = $\frac{\text{PSI x 2.31}}{\text{SP. GR.}}$

PSI = $\frac{\text{Feet Head x SP. GR.}}{2.31}$

Brake Horsepower Required = Curved Horsepower x SP. GR.

Pounds per Gallon = .133 x pounds/cu. ft.

Metric Conversions:

GPM = .264 x liters/min.

GPM = 15.9 x liters/sec.

GPM = 4.4 x meters^3/hr.

GPM = 264 x meters^3/min.

Feet = 3.28 x meters

PSI = 14.2 x Kg/cm^2

SP. GR. = 1 x grams/cu. cm.

Flow

Barrels/ Hour	Barrels/ Day	GPM
4.2	100	3
10.5	250	7.5
21	500	15
31.5	750	22.5
42	1000	30
63	1500	45
83	2000	60
125	3000	90
208	5000	150
312	7500	225
420	10,000	300

Head - For water, Sp. Gr. = 1.0

Feet	Psi	Psi	Feet
10	4.33	10	23.1
20	8.66	20	46.2
25	10.8	25	57.8
30	13	30	69.3
40	17.3	35	80.9
50	21.6	40	92.4
75	32.48	45	104
100	43.2	50	115.5
150	64.8	60	138.6
200	86.4	75	173.2
250	108	100	231
300	130	125	288.7
350	151.6	150	346.5
400	172.8	175	404.2
450	195	200	462

To determine horsepower for pumping weighted fluids

The Pump Performance Curves show horsepower for pumping clear water with a specific gravity of 1 and a weight of 8.34 lb/gal. For fluids with a higher specific gravity than plain water, correct the Pump Performance Curves in the following manner:

1. Find the fluid weight in lb/gal.

2. Multiply horsepower shown on the curve by fluid weight in lb/gal., then divide by 8.34.

Corrected HP = $\frac{\text{Curve Brake HP x Fluid Wt./Gallon}}{8.34}$

Engineering Data...

I. SUCTION PIPING (Continued)...

Theoretical Discharge of Nozzles in U.S. Gallons Per Minute

Head*		Velocity of disch	Diameter of nozzle in inches															
lb.	Feet	ft/sec.	3/8	1/2	5/8	3/4	7/8	1	1 1/8	1 1/4	1 3/8	1 1/2	1 3/4	2	2 1/4	2 1/2	2 3/4	3
10	23.13	38.6	13.3	23.6	36.9	53.1	72.4	94.5	120	148	179	213	289	378	479	591	714	851
15	4.6	47.25	16.3	28.9	45.2	65.0	88.5	116.0	147	181	219	260	354	463	585	723	874	1041
20	46.2	54.55	18.8	33.4	52.2	75.1	102.0	134.0	169	209	253	301	409	535	676	835	1009	1203
25	57.7	61.0	21.0	37.3	58.3	84.0	114.0	149.0	189	234	283	336	458	598	756	934	1128	1345
30	69.3	66.85	23.0	40.9	63.9	92.0	125.0	164.0	207	256	309	368	501	655	828	1023	1236	1473
35	80.8	72.2	24.8	44.2	69.0	99.5	135.0	177.0	224	277	334	398	541	708	895	1106	1335	1591
40	92.4	77.2	26.6	47.3	73.8	106.0	145.0	188.0	239	296	357	425	578	756	957	1182	1428	1701
45	103.9	81.8	28.2	50.1	78.2	113.0	153.0	200.0	253	313	379	451	613	801	1015	1252	1512	1802
50	115.5	86.25	29.7	52.8	82.5	119.0	162.0	211.0	267	330	399	475	647	845	1070	1320	1595	1900
55	127.0	90.5	31.1	55.3	86.4	125.0	169.0	221.0	280	346	418	498	678	886	1121	1385	1671	1991
60	138.6	94.6	32.5	57.8	90.4	130.0	177.0	231.0	293	362	438	521	708	926	1172	1447	1748	2085
65	150.1	98.3	33.8	60.2	94.0	136.0	184.0	241.0	305	376	455	542	737	964	1220	1506	1819	2165
70	161.7	102.1	35.2	62.5	97.7	141.0	191.0	250.0	317	391	473	563	765	1001	1267	1565	1888	2250
75	173.2	105.7	36.4	64.7	101.0	146.0	198.0	259.0	327	404	489	582	792	1037	1340	1619	1955	2330
80	184.8	109.1	37.6	66.8	104.0	150.0	205.0	267.0	338	418	505	602	818	1070	1354	1672	2020	2405
85	196.3	112.5	38.8	68.9	108.0	155.0	211.0	276.0	349	431	521	620	844	1103	1395	1723	2080	2480
90	207.9	115.8	39.9	70.8	111.0	160.0	217.0	284.0	359	443	536	638	868	1136	1436	1773	2140	2550
95	219.4	119.0	41.0	72.8	114.0	164.0	223.0	292.0	369	456	551	656	892	1168	1476	1824	2200	2625
100	230.9	122.0	42.1	74.7	117.0	168.0	229.0	299.0	378	467	565	672	915	1196	1512	1870	2255	2690

*Head loss across nozzle. The actual quantity discharged by a nozzle will be less than above table.
A well tapered smooth nozzle may be assumed to give 97 to 99% of the values in the tables.

NATIONAL OILWELL VARCO

With over 120 locations worldwide, National Oilwell Varco is located near you. To find the nearest Distribution Service Center, machinery center or repair facility, please give us a call at our main office listed below.

Or you can access our website at the URL listed below, where you may search by location or country.

http://www.nov.com/contactus/

Sales/Technical Information:
USA Tollfree: 1 (800) 800-4110

Internet: http://www.nov.com

National Oilwell Varco is a leading manufacturer of reciprocating plunger pumps, centrifugal pumps, and fluid end replacement parts. We also offer a complete set of solutions to fluid transfer challenges. For more Information, contact National Oilwell Varco directly at the Headquarters in Houston, Texas. All National Oilwell Varco products are available throughout the U.S. and around the world from service centers, authorized distributors, and representatives.

© Copyright 1999 by National Oilwell, L.P. All Rights Reserved. NATIONAL OILWELL, NATIONAL, and OILWELL are registered trademarks of NATIONAL OILWELL, L.P. Houston, Texas, USA. All other trademarks used are registered to their respective companies. The information and data in this brochure, including but not limited to pictures, photographs, charts, diagrams, drawings, lists, written comments, and specifications, are accurate to the best of our knowledge and belief, but are intended for general information only. Applications suggested for the materials and other information are described only to help readers make their own evaluations and decisions, and are neither guarantees nor are they to be construed as express or implied warranties of suitability for these or other applications. National Oilwell makes no warranty, either express or implied, beyond that stipulated in National Oilwell's Standard Terms and Conditions of Sale which are available upon request.