American Mfg Company

Quality Mud Pumps and Parts

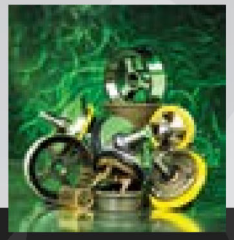
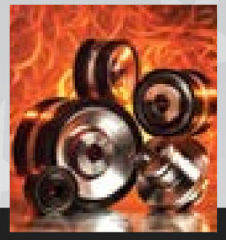

AXG (FG-AXG) 5"x 6"

Duplex Power Pump

Where hard work is still treasured
and quality is a matter of pride.

ISO 9001:2008
Registered

7k-0266

ISO 9001:2008 Registered

7k-0266

American Mfg Company is ISO 9001:2008 Certified.

Perry Johnson Registrars, Inc., has assessed the quality management systems of American Mfg Company, Inc. and declared that the organization is in conformance with ISO 9001:2008 to manufacture OEM Mud Pumps and Replacement Parts for Mud Pumps, Centrifugal Pumps, Rig Parts and Swivel Parts for the Oil, Gas and Water Drilling Industry.

AXG (FG-AXG) Duplex Power Pump

The American Model FG-AXG is a duplex reciprocating type power slush pump designed for maximizing volume without sacrifice of working pressure and compactness.

Its power end is a rugged, one-piece unit with integral supports for jackshaft and eccentric shaft bearings. The cover is removable for easy access to the power end components.

Connecting rods are one-piece cast alloy with renewable eccentric bushings and crosshead bushings. The one-piece skirt type cast alloy crosshead is reinforced at all load areas.

Fluid end of the FG-AXG is a one piece casting with conventional pot type valves. Steel studs secure valve covers, flanges and plates to the fluid end, and fluid end to power end.

All bearings are sealed in individual pressure gun lubricated housings. Eccentrics, crossheads and pins are lubricated from the power end reservoir through normal movement of parts.

American lubricator type packing glands provide positive lubrication to piston rods. This pump is equipped with American pistons, hardened liners, rods and valves.

Standard Equipment

- 5″ API-1 Piston
- Liners and gravel valves
- Double-ended jackshaft
- Piston rods - API-1 taper
- Lubricated Packing Glands

Specifications

Pump Weight: 2,300 lbs. (1,043 kg)

Dimensions
Length: 79.3″
Width: 35.4″
Height: 23.3″

Jackshaft Extension
Diameter: 2.44″
Length: 6.06″
Keyway: 6″ L x 5/8″ W x 5/8″ H

Stroke Length: 6″ (152 mm)

Liner Size
Minimum: 2.5″
Maximum: 5″

Fluid End Type: Cast Iron One Piece

No. of Pistons: 2

Piston Rod Load: 6,122 lbs. (2,777 kg)

Oil Capacity: 4.5 gal. (17 liters)

Maximum BHP
Mud Service: 32 (24 kw)
Ind'l. Service: 42.5 (32 kw)

Maximum Jackshaft RPM
Mud Service: 354
Ind'l. Service: 472

Suction Connection: 4″ NPT 125#

Discharge Connection: 2″ NPT 600#

Note:
All installations must contain a pressure relief valve in the discharge line near the pump to help prevent breakage.

American Mfg Company
Quality Mud Pumps and Parts

Performance Ratings

Based on 90% mechanical efficiency and 100% volumetric efficiency

AXG Duplex Industrial Pump For Oil Line, Mining And Industrial Service

				Normal Operation					** Maximum Recommended Operation							
Model	Stroke	Liner Size Diameter		Displacement		Max Pump RPM	Jack-shaft RPM	Input HP at Max Speed	Displacement		Max Pump RPM	Jack-shaft RPM	Input HP at Max Speed	*** Maximum Working Pressure		Maximum Piston Load
		in.	mm	gpm	lpm				gmp	lpm				psi	kg/cm2	
AXG	6″ (152 mm)	5	127.0	150	568	75	354	32	200	757	100	472	42.5	310	21	6,122 lbs (2,777 kg)
		4 1/2	114.3	121	458				161	609				385	27	
		4	101.6	95	359				126	477				492	34	
		3 1/2	88.9	72	272				96	363				646	45	
		3	76.2	52	197				69	262				895	62	

AXG Duplex Mud Pump For Mud, Grout And Cement Service

				Normal / Maximum Recommended Operation							
Model	Stroke	Liner Size Diameter		Displacement		Max Pump RPM	Jack-shaft RPM	Input HP at Max Speed	*** Maximum Working Pressure		Maximum Piston Load
		in.	mm	gpm	lpm				psi	kg/cm2	
AXG	6″ (152 mm)	5	127.0	150	568	75	354	32	310	21	6,122 lbs (2,777 kg)
		4 1/2	114.3	121	458				385	27	
		4	101.6	95	359				492	34	
		3 1/2	88.9	72	272				646	45	
		3	76.2	52	197				895	62	

** These speeds are recommended for favorable suction conditions and considerations must be given to viscosity and character of fluids.

*** Maximum working pressure shown applies to the fluids ends. Power ends are designed for certain maximum piston rod loads, and in service the power end determines the maximum pressure on a given size piston. Tabulated maximum pressure for any given size piston for maximum piston rod load must not be exceeded even at reduced RPM.

Specifications are subject to change without notice.

American Mfg Company
Quality Mud Pumps and Parts

AXG (FG-AXG) Duplex Power Pump

Table of Contents

	Frame Groups	Pages
1	Frame Assembly Group	5
2	Jackshaft Assembly Group	6
3	Eccentric Assembly Group	7
4	Connecting Rod & Crosshead	8
5	Oil Stop Head	9
6	Stuffing Box	9

	Fluid Cylinder Groups	Pages
7	Fluid Cylinder Group	10
8	Cylinder Liners	11
9	Piston Rod	11
10	Pistons	12
11	Valves	13,14,15
12	Valve Seat Pullers	16
13	Liner Puller	16

Please order by part number and description. Reference numbers are for your convenience only.

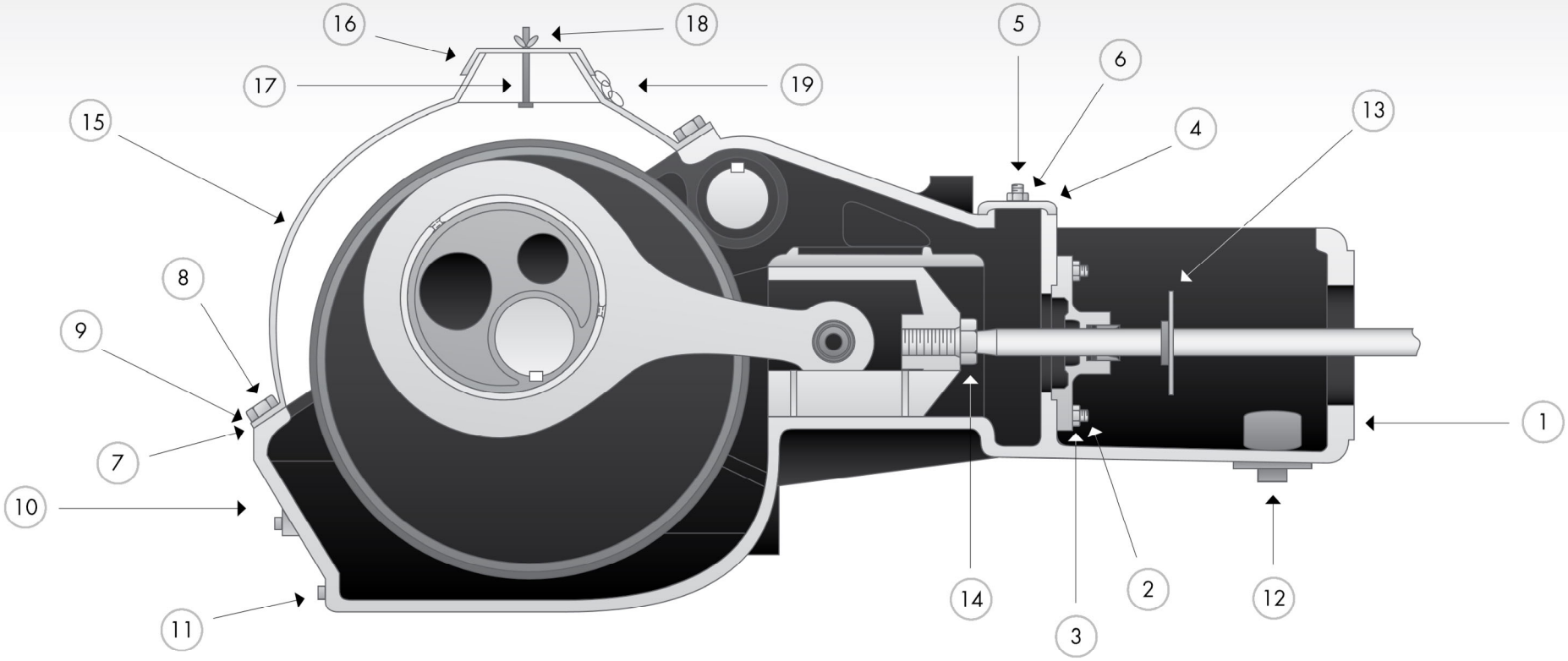

Frame Assembly Group

Ref. No.	Description	Quantity	Part Number
	FRAME ASSEMBLY Includes Ref. No. 1, 2, 3, 5, 6, 7, 10, 11, 12	1	PPGD 1AXG172A
1	FRAME	1	PPGD 1AXG172
2	STUD, Oil Stop Head	4	PPGD 79A238
3	NUT, Oil Stop Head	4	PPGD 50B5
4	PLATE-INSPECTION	1	PPGD 3AXG237-1
5	STUD, Inspection Plate	1	PPGD 79A338
6	NUT, Inspection Plate Stud	1	PPGD 50B3
7	GASKET, Hood	1	PPGD 2009457-1
8	SCREW, Hood	8	PPGD 655EE040
9	WASHER	8	PPGD 655EE040-1

Ref. No.	Description	Quantity	Part Number
10	PLUG, Oil Level	1	PPGD 64AA4
11	PLUG, Oil Drain	1	PPGD 64A5
12	PLUG, Frame Drain	1	PPGD 64A9
13	Baffle, Piston Rod	2	PPGD 1FXG840
14	NUT, CROSSHEAD	2	PPGD 50T67
15	HOOD Assembly Includes 16, 17, 18, 19	1	PPGD 200FXG053
16	HOOD CAP	1	PPGD 200FXG053-1
17	STUD, Hood Cap	1	PPGD 200FXG053-2
18	NUT, Hood Cap	1	PPGD 200FXG053-3
19	CHAIN, Hood Cap	1	PPGD 200FXG053-4

Please order by part number and description. Reference numbers are for your convenience only.

American Mfg Company
Quality Mud Pumps and Parts

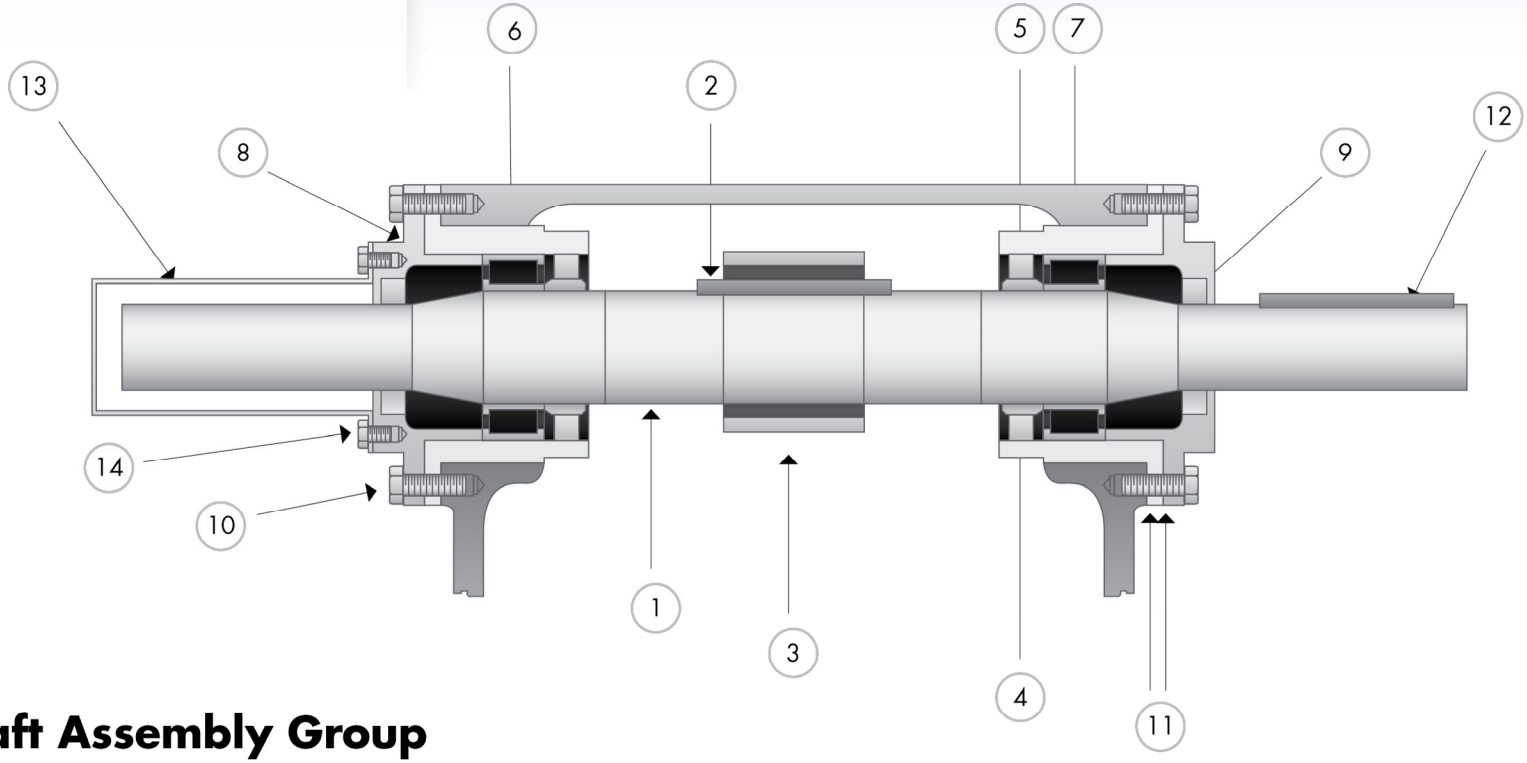

Jackshaft Assembly Group

Ref. No.	Description	Quantity	Part Number
	JACKSHAFT ASSEMBLY Includes Ref. No. 1, 2, 3	1	PPGD FXG374
1	JACKSHAFT	1	PPGD FXG371
2	KEY, Jackshaft to Gear	1	PPGD 35C48
3	GEAR-DRIVEN	1	PPGD FXG181
4	SLEEVE-SHAFT	2	PPGD FXG289
5	SEAL-OIL, Bearing Housing	2	PPGD 60G39
6	HOUSING-BEARING	2	PPGD FXG368
7	BEARING, Jackshaft	2	PPGD 12W2
8	PLATE-BEARING RETAINING Includes PPGD 40E5	2	PPGD FXG370

Ref. No.	Description	Quantity	Part Number
9	SEAL-OIL, Bearing Retaining Plate	2	PPGD 60G40
10	SCREW, Housing & Retaining Plate	12	PPGD 655EE060
11	GASKET, Housing & Retaining Plate	4	PPGD 25C657
12	KEY, Jackshaft	1	PPGD 35B166
13	COVER-SHAFT EXTENSION	1	PPGD 201FXG490
14	SCREW, Shaft Extension Cover	3	PPGD 75A68
*	FITTING-LUBRICATION	2	PPGD 40E5
*	JACKSHAFT, (Tapered Shaft) Mayhew	1	PPGD 19FXG371

* Not shown

Please order by part number and description. Reference numbers are for your convenience only.

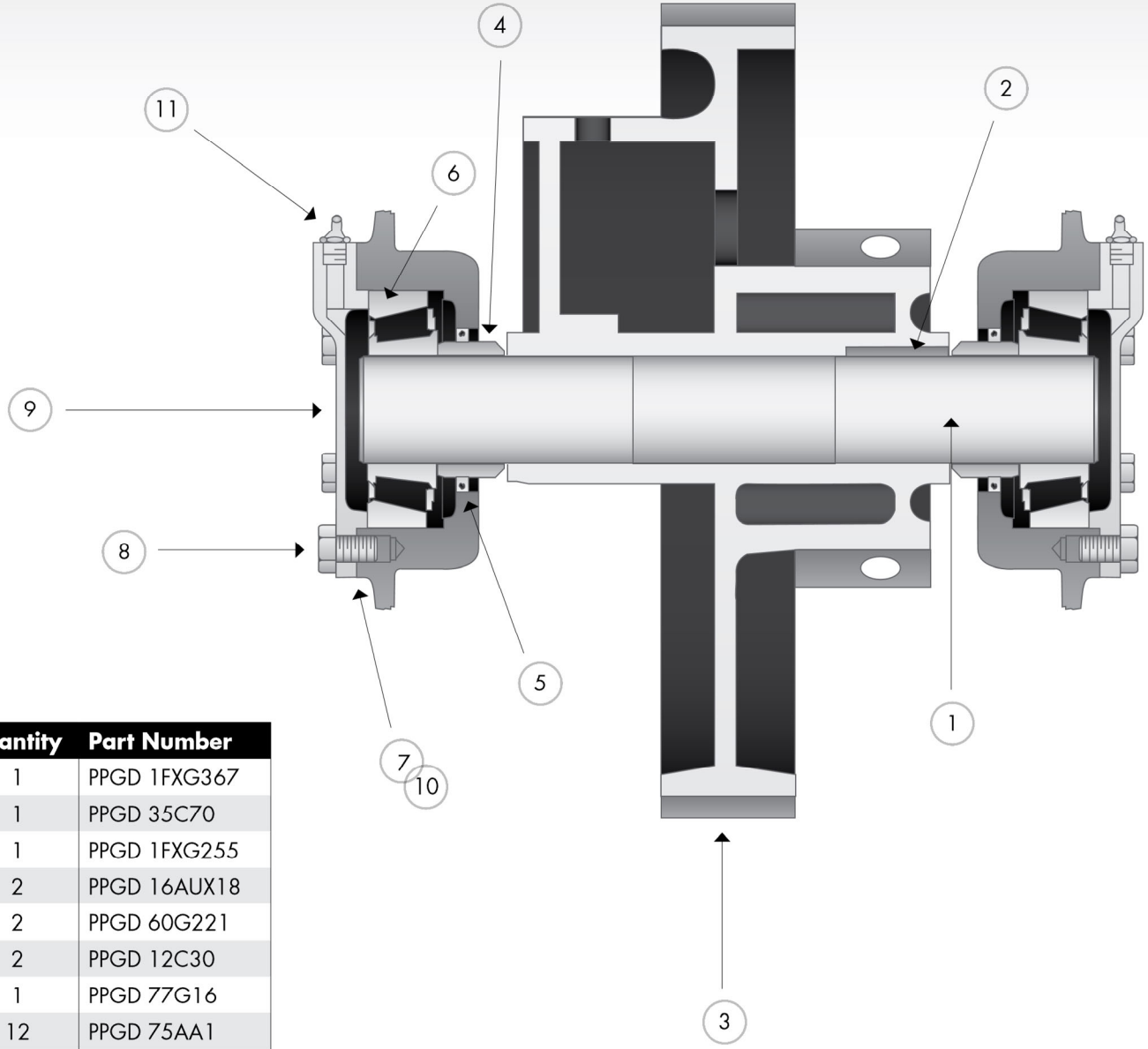

Eccentric Assembly Group

Ref. No.	Description	Quantity	Part Number
1	SHAFT-ECCENTRIC (Includes #2)	1	PPGD 1FXG367
2	KEY	1	PPGD 35C70
3	ECCENTRIC	1	PPGD 1FXG255
4	SLEEVE-SHAFT	2	PPGD 16AUX18
5	SEAL-OIL	2	PPGD 60G221
6	BEARING, Eccentric Shaft	2	PPGD 12C30
7	SHIM, Bearing Cover Plate*	1	PPGD 77G16
8	SCREW, Bearing Cover Plate	12	PPGD 75AA1
9	PLATE-BEARING COVER Includes PPDG 40E5	2	PPGD FXG366
10	GASKET, Bearing Cover Plate**	1	PPGD 25C657
11	FITTING-LUBE	2	PPDG 40E5

* Used opposite PPGD 25C657 Gasket
** Used opposite PPGD 77G16 Shims

Please order by part number and description. Reference numbers are for your convenience only.

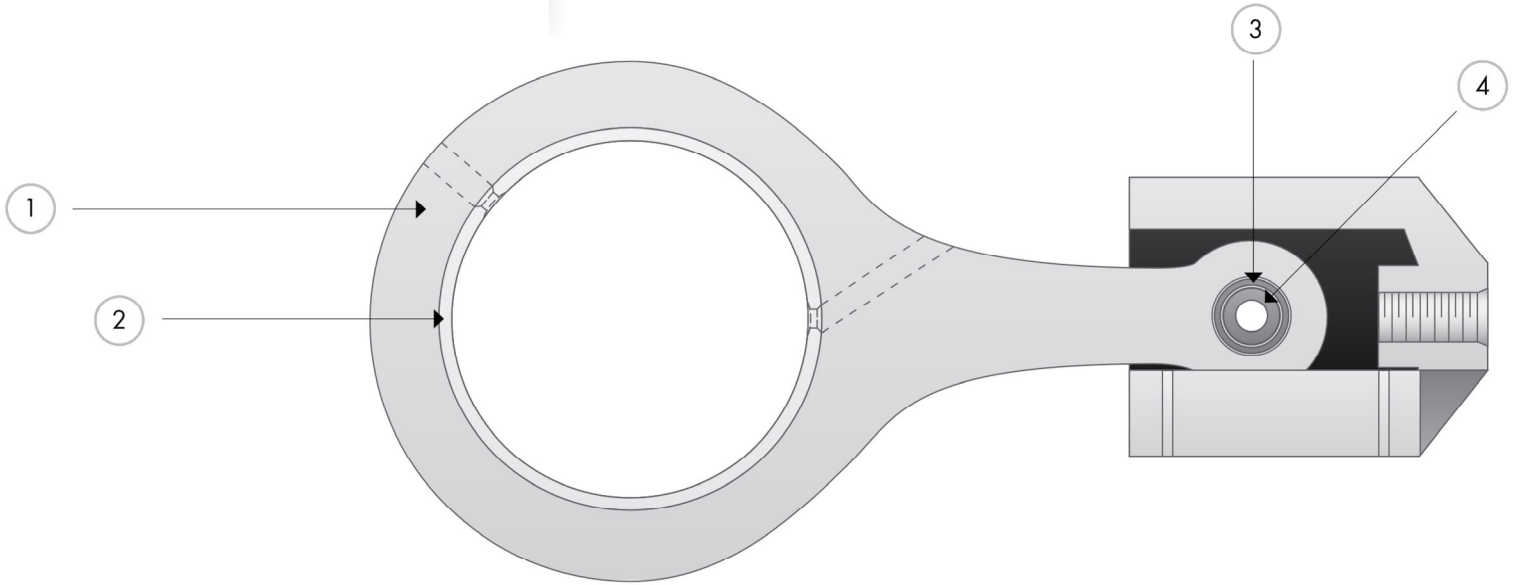

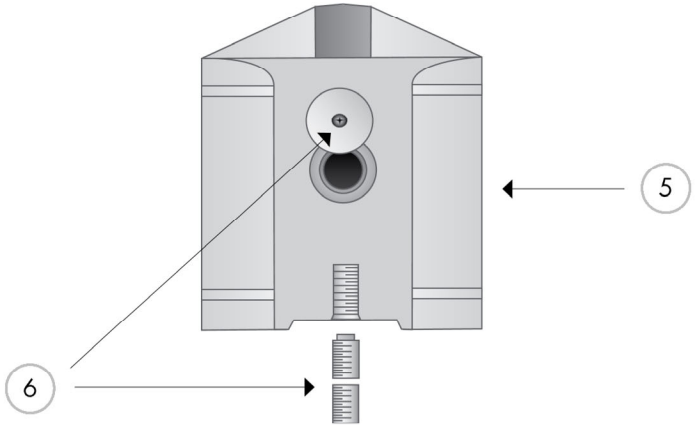

Connecting Rod & Crosshead

Ref. No.	Description	Quantity	Part Number
1	CONNECTING ROD Includes Ref. No. 2 & 3	2	PPGD 1FXG417
2	BUSHING, Eccentric	2	PPGD 3FXG421
3	BUSHING, Crosshead Pin	2	PPGD AXG229
4	PIN CROSSHEAD	2	PPGD FXG189
5	CROSSHEAD Assembly Inc Ref. 6	2	PPGD FXG175X
6	SET SCREW-Assembly	2	PPGD 76J6S

Please order by part number and description. Reference numbers are for your convenience only.

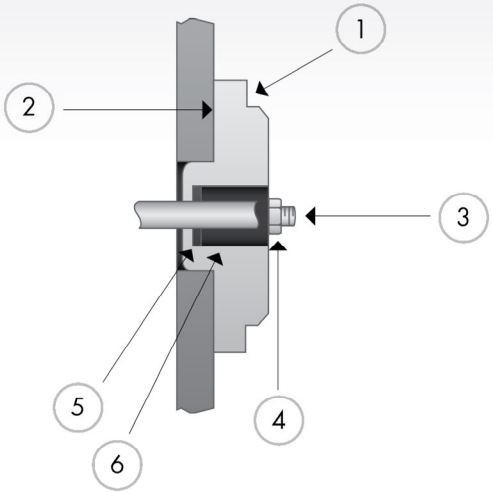

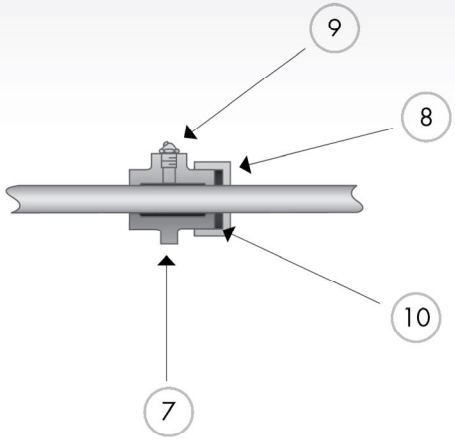

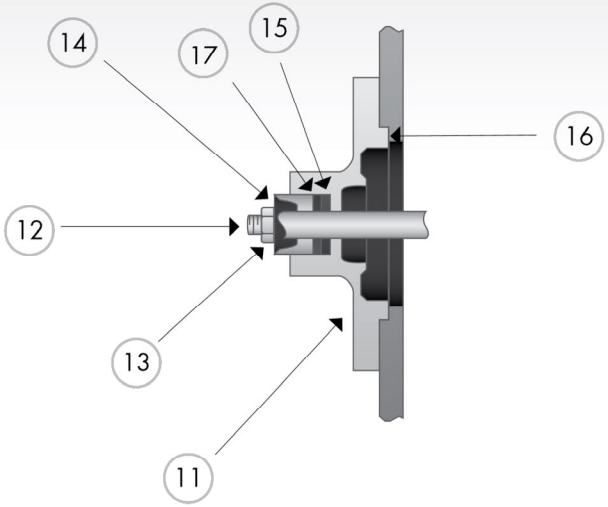

Stuffing Box

Ref. No.	Description	Quantity	Part Number
	STUFFING BOX ASSEMBLY Includes Ref. No. 1, 3, 4	2	PPGD 1FG1538
1	STUFFING BOX		
2	GASKET, Stuffing Box	2	PPGD 25C658
3	STUD, Stuffing Box	4	PPGD 79L125C
4	NUT, Stuffing Box Stud	4	PPGD 50AQ7C
5	RING-JUNK	2	PPGD FG317
6	PACKING, Crown type	2	PPGD 60BH13

Stuffing Box Gland

Ref. No.	Description	Quantity	Part Number
	GLAND ASSEMBLY Includes Ref. No. 7, 8, 9, 10	2	PPGD 200FXG008A
7	GLAND	2	PPGD 200FXG008
8	NUT	2	PPGD 200FXG086
9	FITTING-LUBE	2	PPGD 40E10
10	PACKING-RING	2	PPGD 60DD74

Oil Stop Head

Ref. No.	Description	Quantity	Part Number
	OIL STOP HEAD ASSEMBLY Includes Ref. No. 11, 12, 13	2	PPGD 2FXG495
11	OIL STOP HEAD		
12	STUD, Oil stop head	4	PPGD 79A238
13	NUT, Oil Stop Head Stud	4	PPGD 50B5
14	GLAND, Oil Stop Head	2	PPGD AXG238
15	WASHER, Oil Stop Head	2	PPGD AG318
16	GASKET, Oil Stop Head	2	PPGD 25C656
17	PACKING, Oil Stop Head	2	PPGD 60BG24

Please order by part number and description. Reference numbers are for your convenience only.

American Mfg Company
Quality Mud Pumps and Parts

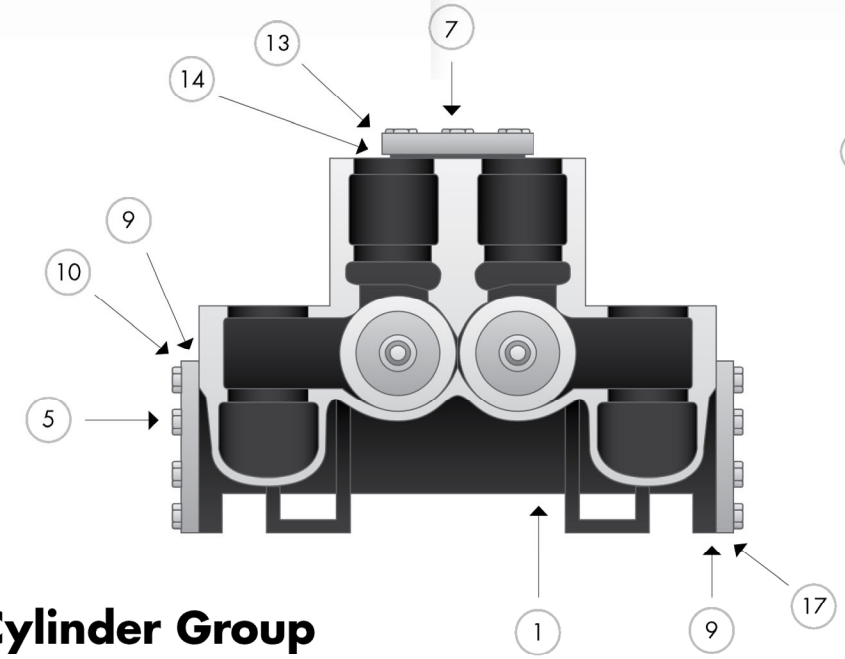

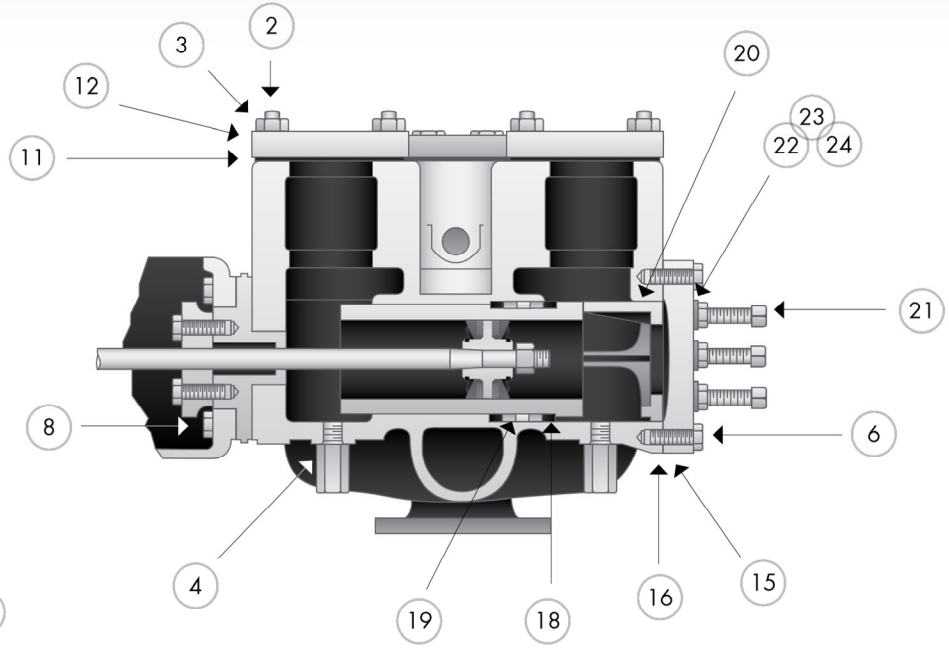

Fluid Cylinder Group

Ref. No.	Description	Quantity	Part Number
	FLUID CYLINDER ASSEMBLY Includes Ref. No. 1-2	1	PPGD 8FG29B
1	FLUID CYLINDER		
2	STUD, Valve Cover	16	PPGD 79L40C
3	NUT, Valve Cover Stud	16	PPGD 50B10
4	PLUG, Drain	5	PPGD 64AU5
5	SCREW, Suction & Blank Flange	16	PPGD 655EF07Z
6	SCREW, Cylinder Head	10	PPGD 655EG09Z
7	SCREW, Discharge Flange	8	PPGD 655EF08Z
8	SCREW, Frame To Cylinder	6	PPGD 655EG11Z
9	GASKET, Suction & Blank Flange	2	PPGD 25C603
10	FLANGE, Suction Blank	1	PPGD FG92
11	GASKET, Valve Cover	8	PPGD 25BE18
12	COVER-VALVE	8	PPGD 3FG147

Ref. No.	Description	Quantity	Part Number
13	FLANGE, Discharge	1	PPGD 64CE4
14	GASKET, Discharge Flange	1	PPGD 25C502
15	HEAD-CYLINDER	1	PPGD 1FG41
16	GASKET, Cylinder Head	2	PPGD 25BE24
17	FLANGE, Suction	1	PPGD 64DC8
18	PACKING, Liner	4	PPGD 25T27
19	SPACER-LANTERN, Liner	2	PPGD 1FG445
20	CLAMP-LINER	2	PPGD 2FG217
21	SET SCREW, Liner Clamp	6	PPGD 76N14
22	PACKING, Liner Clamp Set Screw	6	PPGD 60BQ1
23	WASHER, Liner Clamp Set Screw	6	PPGD 95F7
24	NUT, Liner Clamp Set Screw	6	PPGD 50B7C
*	LINER	2	*See page 12*

Please order by part number and description. Reference numbers are for your convenience only.

Cylinder Liners Two (2) required per pump

Size	Quantity	STANDARD Hardened Steel Part Number	Chrome Plated Part Number	Stainless Steel Part Number	Bronze Part Number
5″	2	PPGD FG45650	PPGD FG45650C	PPGD 3FG45650	PPGD 45FG64
4 1/2″	2	PPGD 1FG45645	PPGD 1FG45645C	PPGD 3FG45645	PPGD 44FG64
4″	2	PPGD 1FG45640	PPGD 1FG45640C	PPGD 3FG45640	PPGD 43FG64
3 1/2″	2	PPGD 1FG45635	PPGD 1FG45635C	PPGD 3FG45635	PPGD 42FG64
3″	2	PPGD 1FG45630	PPGD 1FG45630C	PPGD 3FG45630	PPGD 41FG64
2 1/2″	2	PPGD 1FG45625	PPGD 1FG45625C	PPGD 3FG45625	PPGD 200FGG456

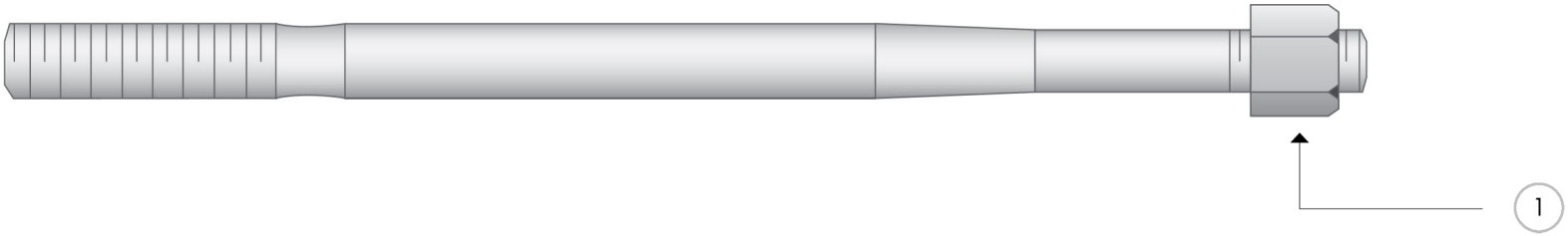

Piston Rod & Lock Nut API No.1 Taper

Ref. No.	Description	Quantity	STANDARD Hardened Steel Part Number	Chrome Plated Part Number	Stainless Steel Part Number	Bronze Part Number
	PISTON, ROD Includes Ref. No. 1, 2	2	PPGD 25FXG183	PPGD 25FXG183C	PPGD 32FXG183	PPGD 33FXG183
1	LOCK NUT	2	PPGD 50V2	PPGD 50V2	PPGD 50V2	PPGD 50V2

Please order by part number and description. Reference numbers are for your convenience only.

American Mfg Company
Quality Mud Pumps and Parts

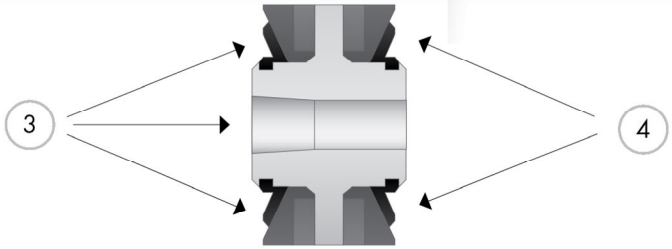

Steel Insert Type Piston API No. 1 Taper

Standard for slush, grout and cement service.

Ref. No.	Description	Quantity	Part Number
3	5″ PISTON ASSEMBLY Includes 5″ Insert Group	2	PPGD 219TBA045A
4	5″ INSERT GROUP Rubber, Retainer Plate & Rings	2	PPGD TBA76002
3	4 1/2″ PISTON ASSEMBLY Includes 4 1/2″ Insert Group	2	PPGD 217TBA045A
4	4 1/2″ INSERT GROUP Rubber, Retainer Plate & Rings	2	PPGD TBA76000
3	4″ PISTON ASSEMBLY Includes 4″ Insert Group	2	PPGD 215TBA045A
4	4″ INSERT GROUP Rubber, Retainer Plate & Rings	2	PPGD TBA75998
3	3 1/2″ PISTON ASSEMBLY Includes 3 1/2″ Insert Group	2	PPGD 213TBA045A
4	3 1/2″ INSERT GROUP Rubber, Retainer Plate & Rings	2	PPGD TBA75996
3	3″ PISTON ASSEMBLY Includes 3″ Insert Group	2	PPGD 211TBA045A
4	3″ INSERT GROUP Rubber, Retainer Plate & Rings	2	PPGD TBA75994

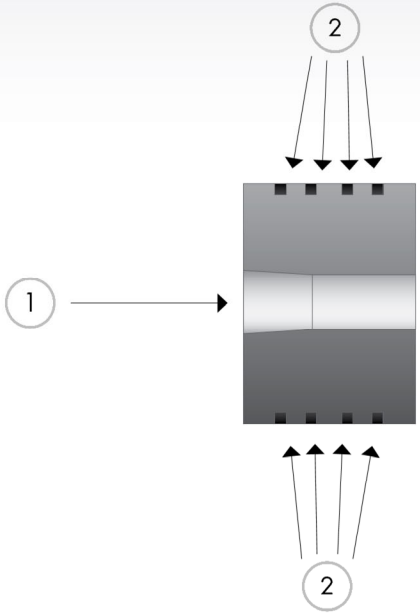

Solid Iron Type Piston API No. 1 Taper

With cast iron rings. Standard for oil service.

Ref. No.	Description	Quantity	Part Number
1	5″ PISTON	2	PPGD 200FXG350
2	5″ RING-PISTON	8	PPGD 65A159
1	4 1/2″ PISTON	2	PPGD 201FXG350
2	4 1/2″ RING-PISTON	8	PPGD 65A1
1	4″ PISTON	2	PPGD 202FXG350
2	4″ RING-PISTON	8	PPGD 65A33
1	3 1/2″ PISTON	2	PPGD 203FXG350
2	3 1/2″ RING-PISTON	8	PPGD 65A9
1	3″ PISTON	2	PPGD 204FXG350
2	3″ RING-PISTON	8	PPGD 65A14

Please order by part number and description. Reference numbers are for your convenience only.

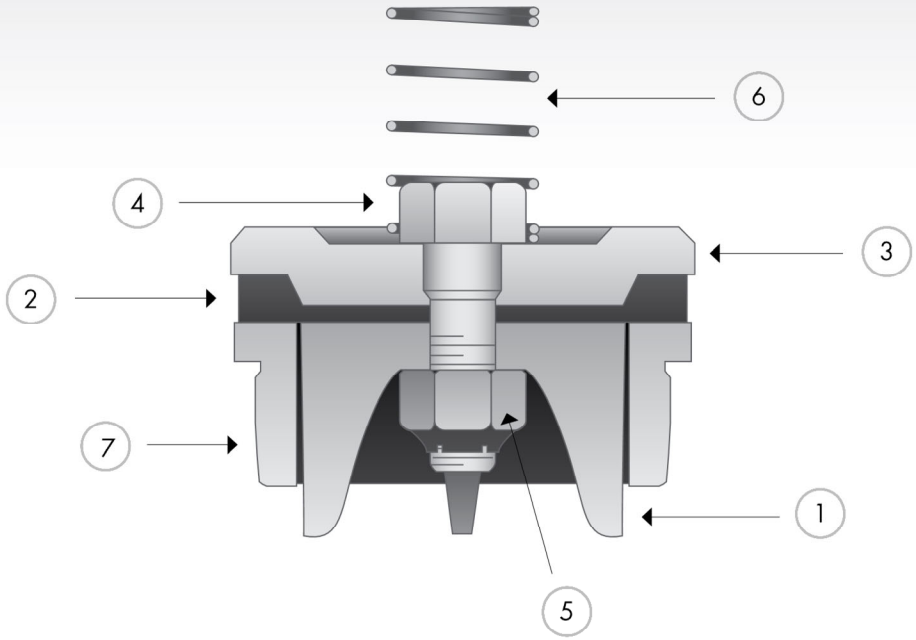

Wing Guided Gravel Valve

Hardened steel with rubber insert (Slush, grout & cement service)

Ref. No.	Description	Quantity	STANDARD Part Number	Part Number
			Hardened Steel, Rubber Insert	**Hardened Steel, Polyurethane Insert**
	FLUID VALVE ASSEMBLY Includes Ref. No. 1, 2, 3, 4, 5	8	PPGD 200FGG482A	PPFA 141F743
1	VALVE-FLUID	8	PPGD 200FGG482	PPGD 200FGG482
2	INSERT	8	PPGD 200FGG106	PPFA 140F839
3	WASHER-VALVE	8	PPGD 200FGG279	PPGD 200FGG279
4	SCREW	8	PPGD 200FGG655	PPGD 200FGG655
5	LOCKNUT	8	PPGD 50AF8	PPGD 50AF8
6	SPRING (Brass)	8	PPGD 78D22	PPGD 78D22
7	SEAT-VALVE	8	PPGD 200FGG039	PPGD 200FGG039
*	SPRING (Steel)	8	PPGD 78A171ST	PPGD 78A171ST
*	SPRING (Stainless Steel)	8	PPGD 78A171SS	PPGD 78A171SS

* Optional Springs

Please order by part number and description. Reference numbers are for your convenience only.

American Mfg Company
Quality Mud Pumps and Parts

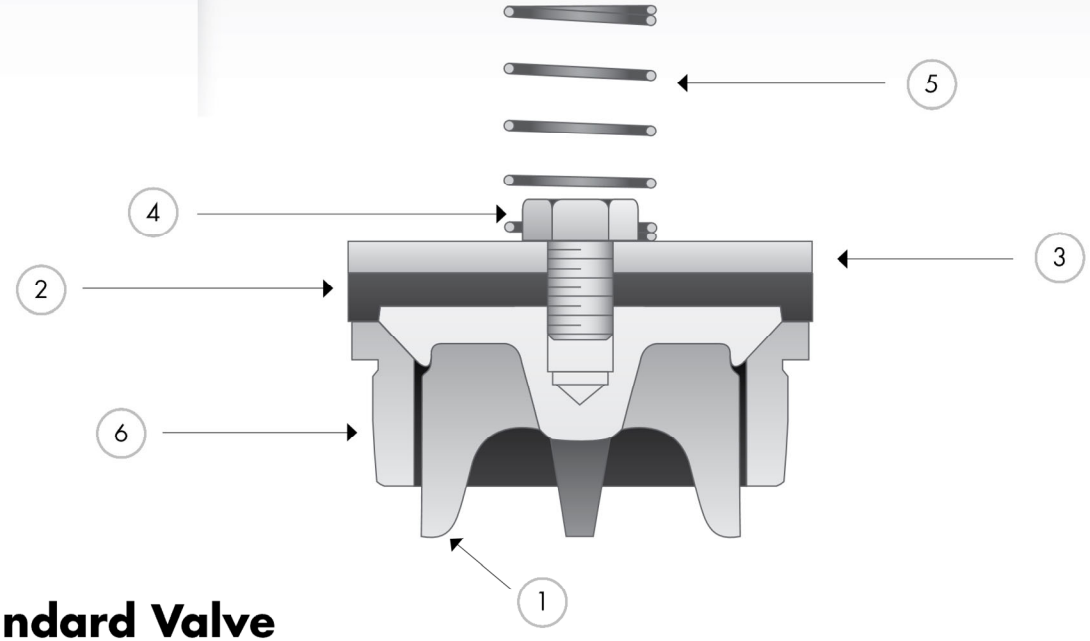

Wing Guided Standard Valve

Slush, grout, cement & water service

Ref. No.	Description	Quantity	Part Number	Part Number	Part Number
			Hardened Steel, Rubber Insert	**Hardened Steel, Polyurethane Insert**	**Bronze, Rubber Insert**
	FLUID VALVE ASSEMBLY Includes Ref. No. 1, 2, 3, 4	8	PPGD 1FG928	PPFA 141F706	PPGD 21FG206A
1	VALVE-FLUID	8	PPGD 17FG206	PPGD 17FG206	PPGD 21FG206
2	INSERT	8	PPGD 1FG452	PPFA 140F838	PPGD 1FG452
3	TOP PLATE	8	PPGD 95D49	PPGD 95D49	PPGD 95G11
4	SCREW	8	PPGD 5FF156	PPGD 5FF156	PPGD 7FF156
5	SPRING (Brass)	8	PPGD 78D22	PPGD 78D22	PPGD 78D22
6	SEAT-VALVE	8	PPGD 11FG39	PPGD 11FG39	PPGD 9FG39
*	SPRING (Steel)	8	PPGD 78A171ST	PPGD 78A171ST	PPGD 78A171ST
*	SPRING (Stainless Steel)	8	PPGD 78A171SS	PPGD 78A171SS	PPGD 78A171SS

* Optional Springs

Please order by part number and description. Reference numbers are for your convenience only.

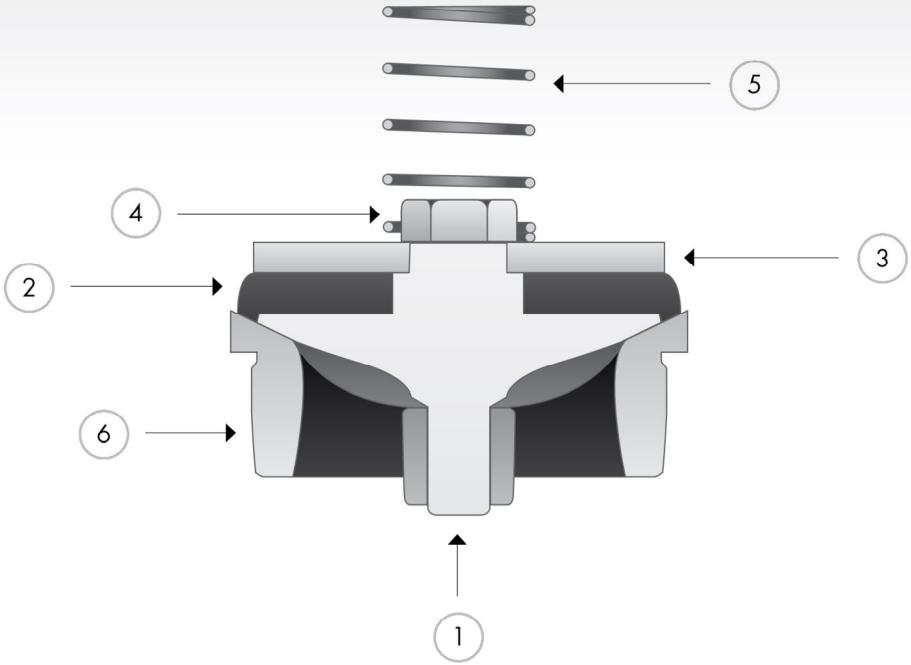

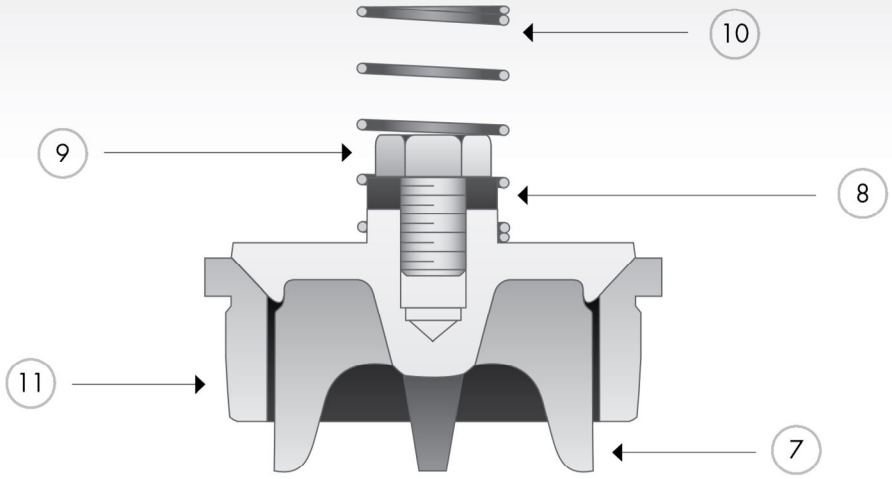

Center Guided Valve

Hardened steel with rubber insert – Slush service

Ref. No.	Description	Quantity	Part Number
	FLUID VALVE ASSEMBLY Includes Ref. No. 1, 2, 3, 4	8	PPGD 1FG908
1	VALVE-FLUID	8	PPGD 3FG482
2	INSERT (Rubber)	8	PPGD 5FG452
3	WASHER	8	PPGD 1FG279
4	NUT	8	PPGD 50G8
5	SPRING (Brass)	8	PPGD 78D22
6	SEAT-VALVE	8	PPGD 1FG451
*	SPRING (Steel)	8	PPGD 78A171ST
*	SPRING (Stainless Steel)	8	PPGD 78A171SS

* Optional Springs

Wing Guided Valve

Hardened steel without insert – Oil or general service

Ref. No.	Description	Quantity	Part Number
	FLUID VALVE ASSEMBLY Includes Ref. No. 7, 8, 9	8	PPGD 17FG206A
7	VALVE-FLUID	8	PPGD 17FG206
8	WASHER-VALVE	8	PPGD 95D136
9	SCREW	8	PPGD 5FF156
10	SPRING	8	PPGD 78A134
11	SEAT-VALVE	8	PPGD 11FG39

Please order by part number and description. Reference numbers are for your convenience only.

American Mfg Company
Quality Mud Pumps and Parts

Valve Seat Puller Gravel Type (Optional equipment)

Ref. No.	Description	Quantity	All FGAXG Models Part Number
	PULLER ASSEMBLY, VALVE SEAT Includes 1, 2, 3, 4	1	PPGD 200FGG219A
1	BOLT-PULLER	1	PPGD 2AUX235
2	PLATE-PULLER	1	PPGD 2AUX292
3	NUT-HEX	1	PPGD 50C11
4	PULLER, Valve Seat	1	PPGD 200FGG219

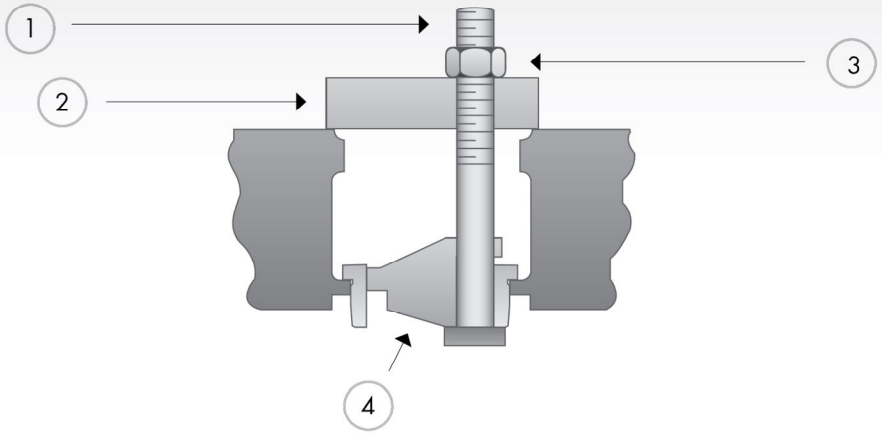

Valve Seat Puller Standard Type (Optional equipment)

Ref. No.	Description	Quantity	All FGAXG Models Part Number
	PULLER ASSEMBLY Includes Ref. No. 5, 6, 7, 8	1	PPGD 1AUX545
5	BOLT-PULLER	1	PPGD 2AUX235
6	PLATE-PULLER	1	PPGD 2AUX292
7	PULLER	1	PPGD 3AUX91
8	NUT	1	PPGD 50C11

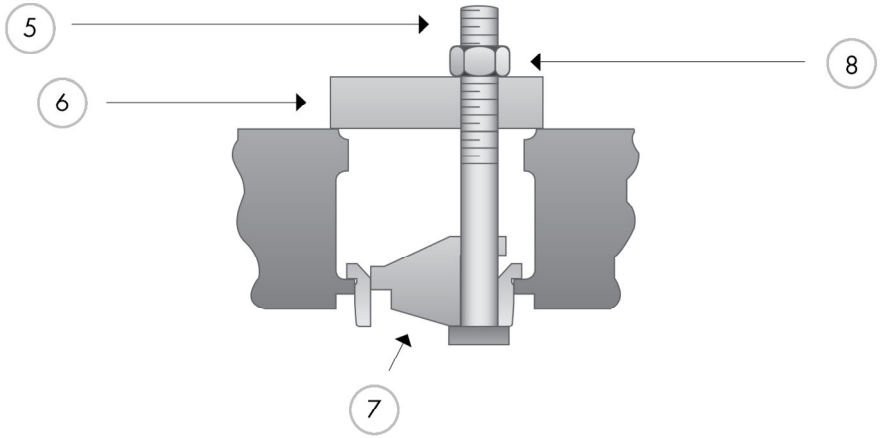

Liner Puller (Optional equipment)

Ref. No.	Description	Quantity	All FGAXG Models Part Number
	PULLER ASSEMBLY 3-5" Bore Includes Ref. No. 9, 10, 11, 12, 13, 14		PPGD FD284
9	BOLT-PULLER	1	PPGD FG344
10	TOOL, Liner Puller	1	PPGD 1FG346
11	NUT	1	PPGD 50B8
12	PIN	1	PPGD 62A93
13	WASHER	1	PPGD 95A8
14	PULLER	1	PPGD 1FG345

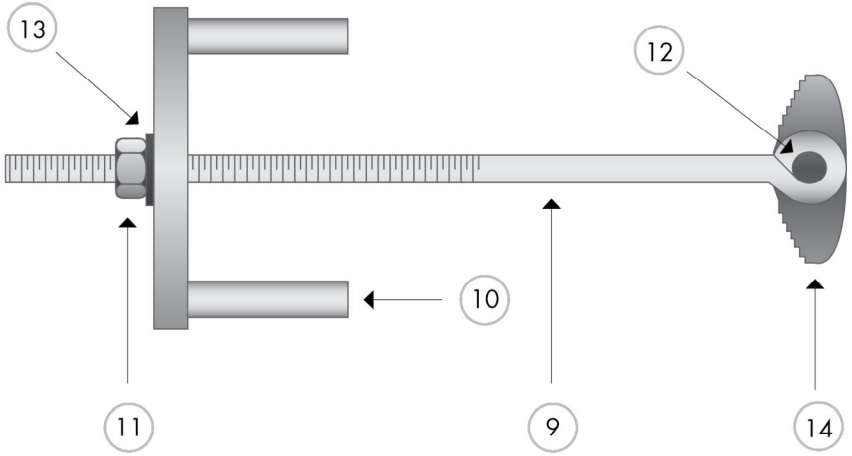

Please order by part number and description. Reference numbers are for your convenience only.

Index

Page

Connecting Rod 8
Crosshead 8
Cylinder Liners 11
Details 2
Eccentric Assembly Group 7
Fluid Cylinder Group 10
Frame Assembly Group 5
Jackshaft Assembly Group 6
Liner Puller 16
Oil Stop Head 9
Performance 3
Piston Rod 11
Pistons 12
Specifications 2
Stuffing Box 9
Stuffing Box Gland 9
Valve Seat Pullers 16
Valves 13,14,15

American Mfg Company

Quality Mud Pumps and Parts

ex•cel•lent \ˈek-s(ə-)lənt\adj.

1: SUPERIOR 2: of the highest or finest quality; exceptionally good; superb.

Where hard work is still treasured and quality is a matter of pride.

How To Order Replacement Parts

All orders for parts should be placed with the nearest sales and service office.

To determine the right and left hand side of the pump, stand at the power end and face the fluid end of the pump.

Specify pump model, size, and serial number (see name plate on the pump). Serial number is also stamped on the cylinder end of the frame.

Please order by the part number and specify exactly the number of parts required.

How To Return A Part

All claims must be made within five days after you receive your products. If your order was filled correctly, shipping and handling charges will apply and must be prepaid.

All parts returned for credit should be handled in the same manner as that for duplication or inspection.

Duplication And Inspection

If it is necessary to return a part to the factory for duplication or inspection, please take the following steps.

1. Call your nearest sales and service office let them know which items you wish to return.
2. Receive a return authorization form from the sales and service office.
3. Place a copy of your RGA in the package when returning parts.
4. Give the serial number of the machine from which the parts were removed or the invoice number on which the parts originally shipped.

American Mfg Company
Quality Mud Pumps and Parts

AXG SERIES DUPLEX POWER PUMPS WARRANTY

American Manufacturing (the "Company") warrants its products only as follows:

GENERAL PROVISIONS AND LIMITATIONS

The Company warrants to each original retail purchaser ("purchaser") of its new products from the Company or its authorized distributor that such products are, at the time of delivery to the Purchaser, made with good material and workmanship, provided that no warranty is made with respect to:

1. Any product which has been repaired or altered in such a way, in the Company's judgment, as to affect the product adversely.

2. Any product which has, in the Company's judgment, been subject to negligence, accident, improper storage, or improper installation or application.

3. Any product which has not been operated or maintained in accordance with normal practice and with the recommendations of the Company.

4. Components or accessories manufactured, warranted and serviced by others.

5. Any reconditioned or prior owned product.

Claims for items described in (4) above should be submitted directly to the manufacturer.

The Company's obligation under this warranty is limited to repairing or, at it option, replacing, during normal business hours any part which in its judgment proved no to be as warranted within the applicable Warranty Period. During the first 90 days after start-up, not exceed 120 days after delivery, a new part or a repaired par along with the labor for installation of such new or repaired part will be provided. Such parts and labor will be provided without charge to the user during normal working hours at the Company's or authorized distributor's service facility. All costs of transportation of product or parts claimed not to be as warranted and of repaired or replacement parts to or from such service facility shall be borne by the Purchaser. The Company may require the return of any product or part claimed not to be as warranted to one of any product or part claimed not to be as warranted to one of its facilities as designated by Company, transportation prepaid by Purchaser, to establish a claim under this warranty.

Replacement parts provided under the terms of this warranty are warranted for the remainder of the Warranty Period of the product upon which installed to the same extent as if such parts were original components thereof.

WARRANTY PERIOD

Except for the products or components listed below, the Warranty Period for all products is 1,250 hours of operation or three months after start-up, not to exceed 120 days after delivery to Purchaser, whichever occurs first. The exceptions are as follows;

Power end and fluid end are warranted for 12 months from date of start-up or 18 months from date of delivery to the purchaser, whichever occurs first.

Expendable fluid end parts, including valves, valve parts, liners and pistons, are not covered by this warranty due to variable abrasive nature of material pumped.

DISCLAIMER

THE COMPANY MAKES NO OTHER WARRANTY OF ANY KIND WHATSOEVER EXPRESSED OR IMPLIED AND ALL WARRANTIES OF MERCHANTABILITY AND FITNESS FOR A PARTICULAR PURPOSE ARE HEREBY DISCLAIMED BY THE COMPANY. THE COMPANY SHALL IN NO CASE BE SUBJECT TO ANY OTHER OBLIGATIONS OR LIABILITIES WHATSOEVER WITH RESPECT TO PRODUCTS OR SERVICES MANUFACTURED OR FURNISHED BY IT OR ANY ACTS OR OMISSIONS RELATING THERETO. THE REMEDY PROVIDED UNDER THIS WARRANTY SHALL BE THE SOLE, EXCLUSIVE AND ONLY REMEDY AVAILABLE TO PURCHASER. UNDER NO CIRCUMSTANCES SHALL THE COMPANY BE LIABLE FOR ANY SPECIAL, INDIRECT, INCIDENTAL OR CONSEQUENTIAL DAMAGES, EXPENSES, LOSSES OR DELAYS HOWSOEVER CAUSED.

No statement, representation, agreement or understanding, oral or written, made by any agent, distributor, representative or employee of the Company which is not contained in this Warranty will be binding upon the Company unless made in writing and executed by an officer of the Company.

This warranty shall not be effective as to any claim which is not presented within 30 days after the date upon which the product is claimed not have been as warranted. Any action for breach of this warranty must be commenced within one year after the date upon which the cause of action occurred.

Any adjustment made pursuant to this warranty shall not be construed as an admission by the Company that and product was not as warranted.

American Mfg Company is a quality manufacturer of pumps and replacement parts for a wide variety of mud pumps, centrifugal pumps, drilling rigs, and swivels found in the world market today.

American Mfg Company's plant is located in America's Heartland. Our highly trained staff uses state-of-the-art equipment and proven quality control methods to produce the finest pumps and replacement parts found on the market today.

Our pumps and replacement parts are used in many different industries including the mining, water well, oilfield, geothermal and horizontal directional drilling industries.

Every part we make is manufactured to standards equal to or exceeding those of the O.E.M.

Service parts are available through American Mfg Company's worldwide network of distributors or from the original supplier for the equipment that the pump is a component of.

American Mfg Company

Quality Mud Pumps and Parts

Factory/Sales Office

P.O. Box 640
736 19th Avenue NE
St. Joseph, Minnesota 56374

(888) 299-3412 ~ Toll Free
(320) 363-7273 ~ Phone
(320) 363-7274 ~ Fax

info@american-manufacturing.com
www.american-manufacturing.com

7k–0266

ISO 9001:2008 Registered